CUDEVICES

MODEL: UJ20-C-V-SMT-TR-68 | **DESCRIPTION:** USB RECEPTACLE

FEATURES

- USB Type C receptacle
- IP68
- USB 2.0
- o-ring accessory
- tape & reel packaging

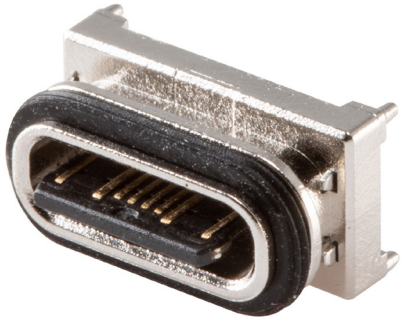

SPECIFICATIONS

parameter	conditions/description	min	typ	max	units
USB standard	USB 2.0				
rated input voltage				20	Vdc
rated input current	as per EIA-364-70, Method B power pins collectively (A1, A4, A9, A12, B1, B4, B9, B12) VCONN pins individually (A5, B5) all other signal pins individually			 5.0 1.25 0.25	 A A A
contact resistance[1]	between terminals and mating plug			40	mΩ
insulation resistance	between adjacent contacts	100			MΩ
voltage withstand	between adjacent contacts	100			Vac
insertion force		5		20	N
withdrawal force		8		20	N
life			10,000		cycles
operating temperature		-40		85	°C
flammability rating	UL94V-0				
RoHS	yes				
IP level	IP68				

Note: 1. When measured at 20 mV / 100 mA.
2. All specifications measured at 10~35°C, humidity at 45~85%, under standard atmospheric pressure, unless otherwise noted.

SOLDERABILITY

parameter	conditions/description	min	typ	max	units
reel storage	at relative humidity 65~70%	25		30	°C
reflow soldering[3]	see reflow profile		255	260	°C

Note: 3. It is recommended to reflow solder within 3 months from opening vacuum packaging at a temperature of 25~30°C & relative humidity 65~70%.

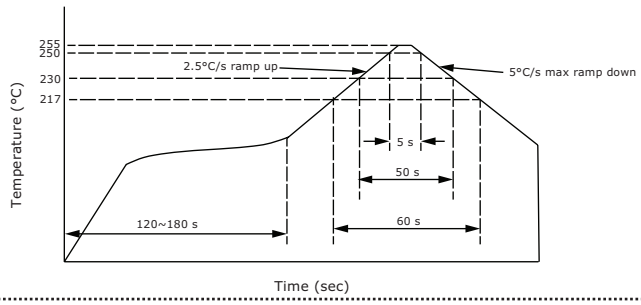

MECHANICAL DRAWING

units: mm
tolerance:
X ±0.50 mm
X.X ±0.30 mm
X.XX ±0.20 mm
X.XXX ±0.100 mm
unless otherwise specified

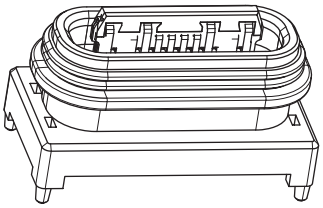

DESCRIPTION	MATERIAL	PLATING/COLOR
insulator	LCP (UL94V-0)	black
contact	copper alloy t=0.15 mm	contact area: gold flash over tin-nickel solder area: tin over nickel
shell	stainless steel t=0.25 mm	nickel
o-ring	silicone	black

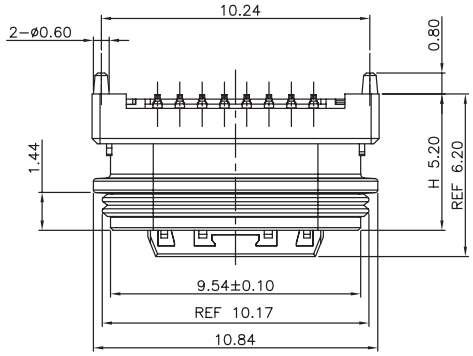

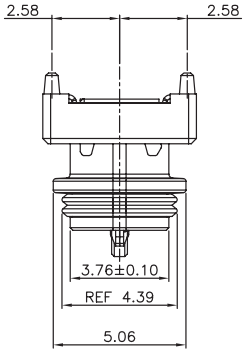

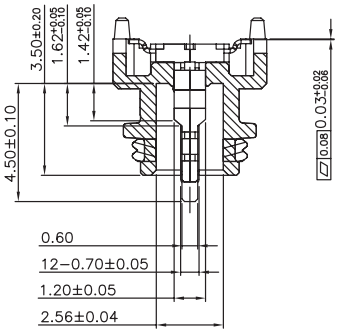

SECTION A−A

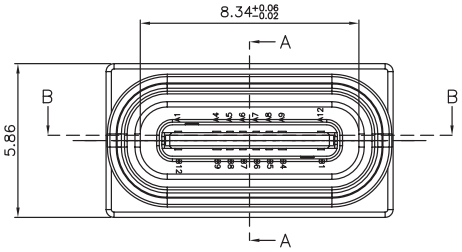

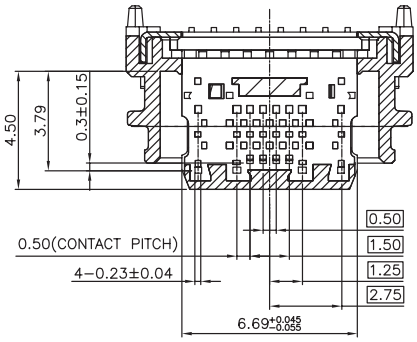

SECTION B−B

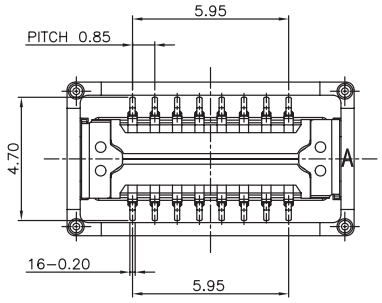

O-ring

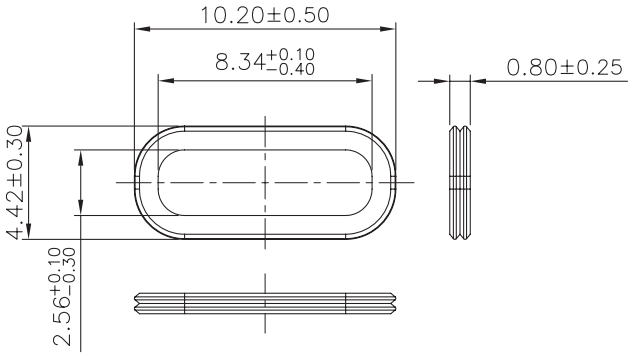

MECHANICAL DRAWING (CONTINUED)

units: mm
PCB tolerance: ±0.05 mm

PIN CONNECTIONS					
PIN	SIGNAL NAME	MATING SEQUENCE	PIN	SIGNAL NAME	MATING SEQUENCE
A1	GND	FIRST	B12	GND	FIRST
A4	V_{BUS}	FIRST	B9	V_{BUS}	FIRST
A5	CC1	SECOND	B8	SBU2	SECOND
A6	Dp1	SECOND	B7	Dn2	SECOND
A7	Dn1	SECOND	B6	Dp2	SECOND
A8	SBU1	SECOND	B5	CC2	SECOND
A9	V_{BUS}	FIRST	B4	V_{BUS}	FIRST
A12	GND	FIRST	B1	GND	FIRST
SHELL		GND	SHELL		GND

with cap

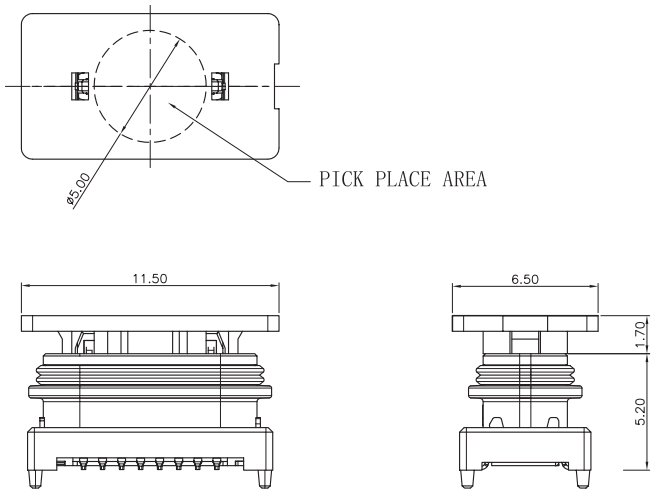

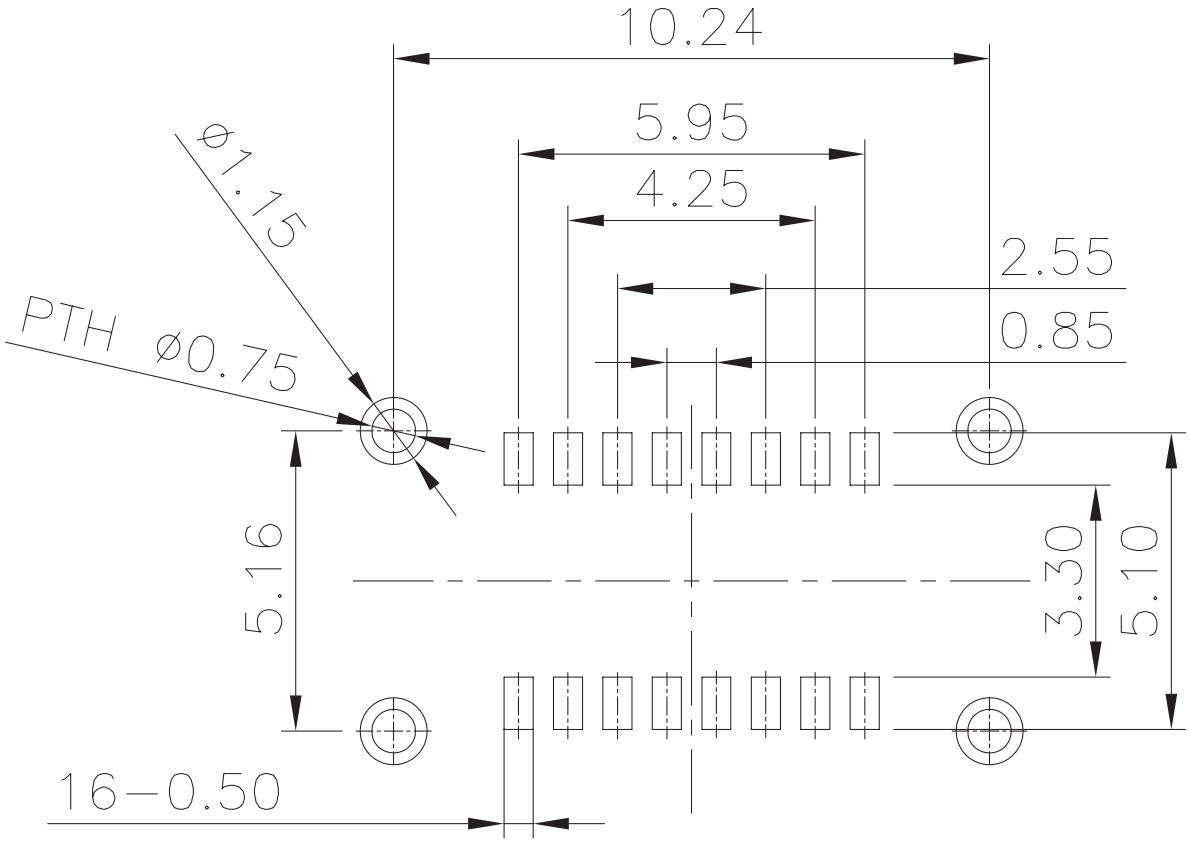

Recommended PCB Layout
Top View

ASSEMBLY REFERENCE

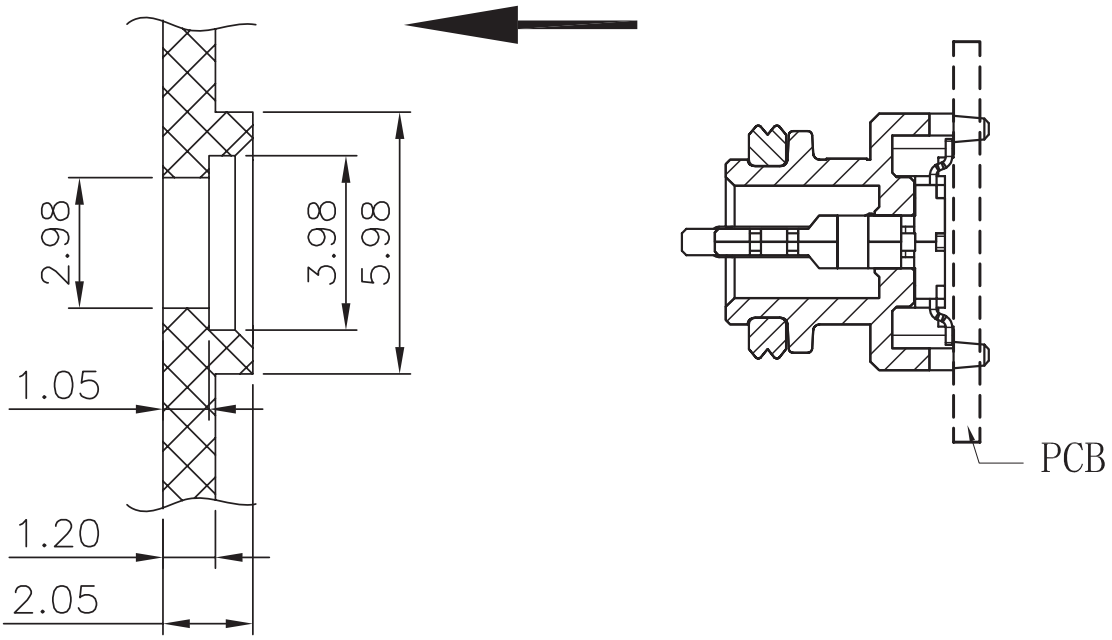

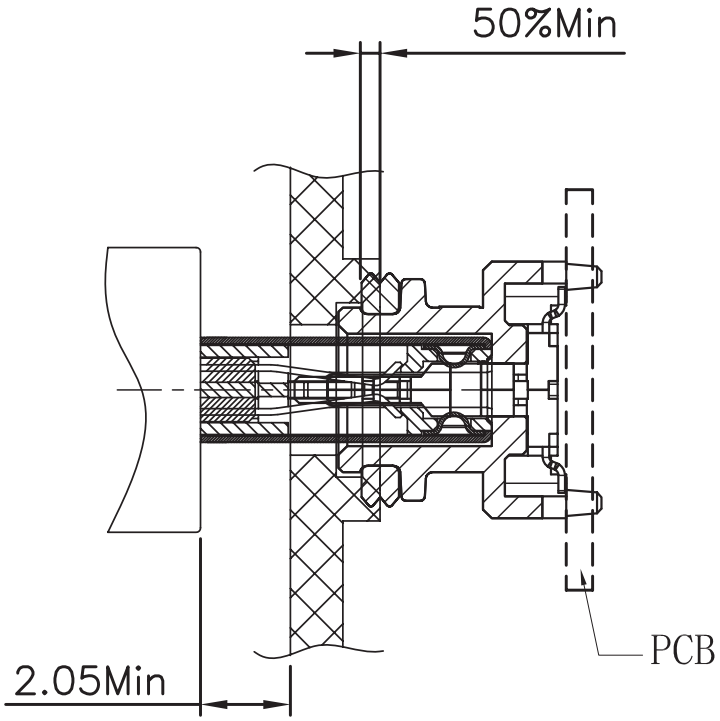

PACKAGING

units: mm

Reel Size: Ø380 mm
Reel QTY: 650 pcs per reel
Carton Size: 405 x 405 x 330 mm
Carton QTY: 5,200 pcs

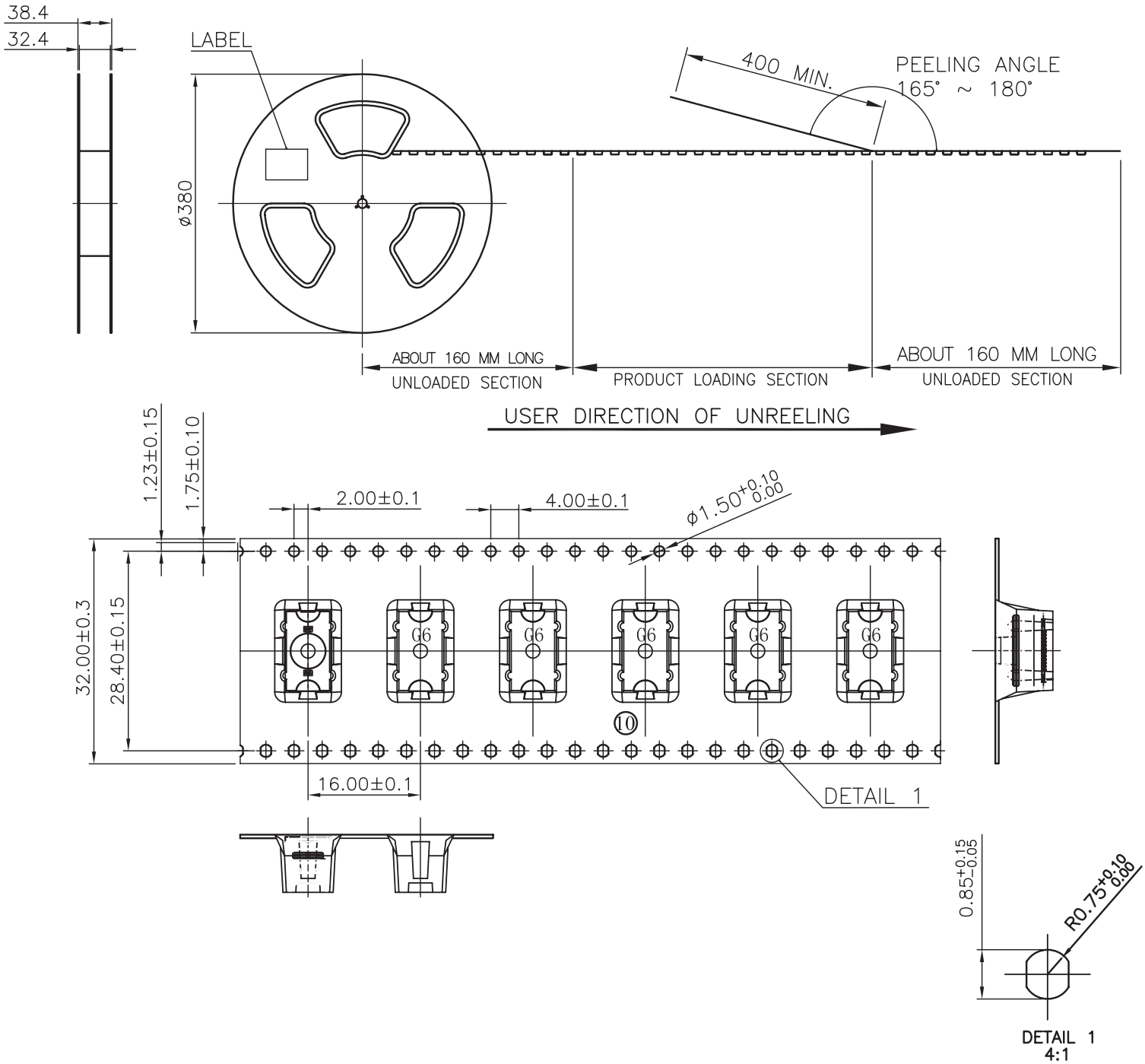

REVISION HISTORY

rev.	description	date
1.0	initial release	08/23/2023

The revision history provided is for informational purposes only and is believed to be accurate.

CUI Devices offers a one (1) year limited warranty. Complete warranty information is listed on our website.

CUI Devices reserves the right to make changes to the product at any time without notice. Information provided by CUI Devices is believed to be accurate and reliable. However, no responsibility is assumed by CUI Devices for its use, nor for any infringements of patents or other rights of third parties which may result from its use.

CUI Devices products are not authorized or warranted for use as critical components in equipment that requires an extremely high level of reliability. A critical component is any component of a life support device or system whose failure to perform can be reasonably expected to cause the failure of the life support device or system, or to affect its safety or effectiveness.