CUDEVICES

SERIES: SJ1-251X-SMT | **DESCRIPTION:** AUDIO JACK

FEATURES

- low profile design
- switch options include:
  - no switch
  - tip switch
  - tip and ring switch

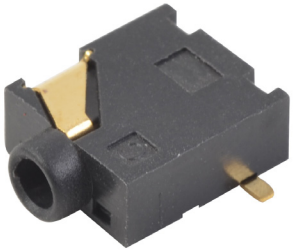

RoHS

PART NUMBER KEY

SJ1 - 251 X - SMT - TR

- Base Number
- Switch Options:
  3 = no switch
  5 = tip and ring switch
- Package Style:
  SMT = surface mount
- Packaging:
  TR = Tape & Reel

SPECIFICATIONS

parameter	conditions/description	min	typ	max	units
rated input voltage			12		Vdc
rated input current				1	A
contact resistance				50	mΩ
insulation resistance	at 500 Vdc	100			MΩ
voltage withstand	for 1 minute			500	Vac
insertion/withdrawal force		0.3		3	kg
operating temperature		-25		85	°C
life			5,000		cycles
flammability rating	UL94V-0				
RoHS	yes				

MECHANICAL DRAWING

units: mm
tolerance:
0.0<X≤5.0: ±0.10 mm
X>5.0: ±0.20 mm
unless otherwise specified

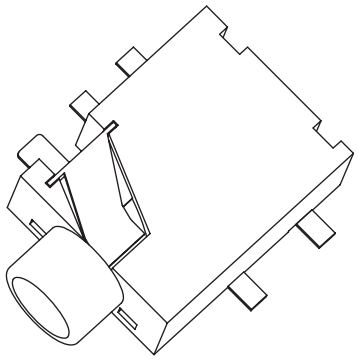

DESCRIPTION	MATERIAL	PLATING/COLOR
terminal 1	brass	gold
terminal 2	BE-CU	gold
terminal 3	BE-CU	gold
terminal 10	brass	gold
termianl 11	brass	gold
housing	PA6T	black

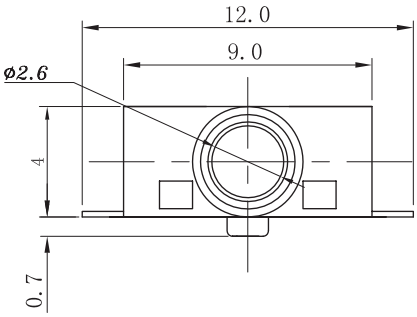

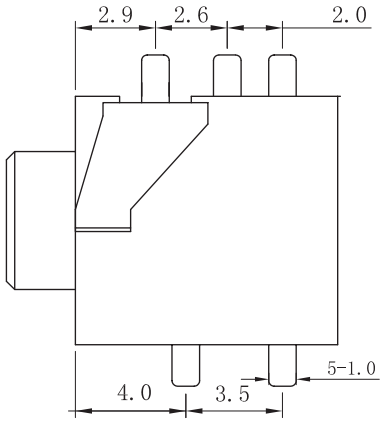

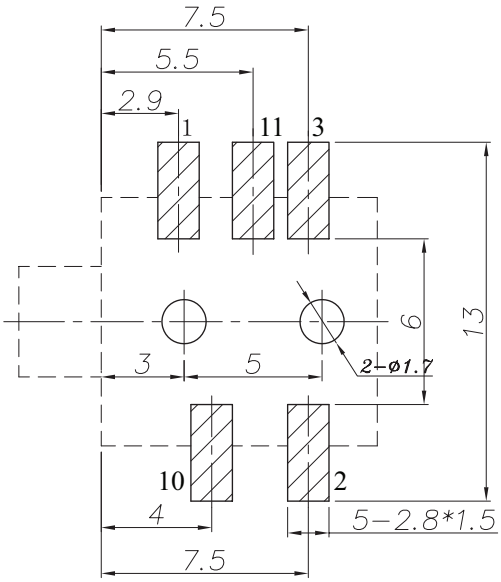

Recommended PCB Layout
Top View

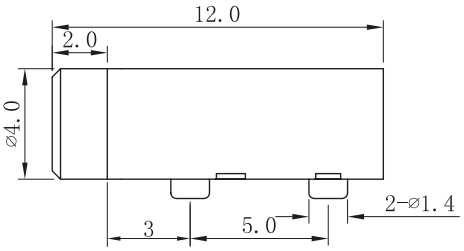

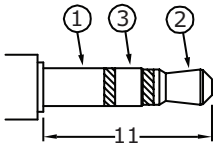

Ø2.5 MATING PLUG

Model No.	SJ1-2513-SMT	SJ1-2515-SMT
Schematic	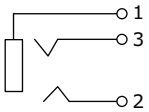	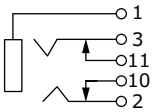
PIN		
1	sleeve	sleeve
2	tip	tip
3	ring	ring
10	NP	tip switch
11	NP	ring switch

SOLDERABILITY

parameter	conditions/description	min	typ	max	units
reel storage	≤30°C, ≤80% humidity				°C
reflow soldering[1]	see reflow profile		260		°C
drying conditions	parts in reel: bake at 40±5°C for 72 hours parts removed from reel: bake at 40±5°C for 10 hours				

Note: 1. CUI Devices recommends to solder within 72 hours from opening vacuum packaging at a temperature <30°C & relative humidity <80%.

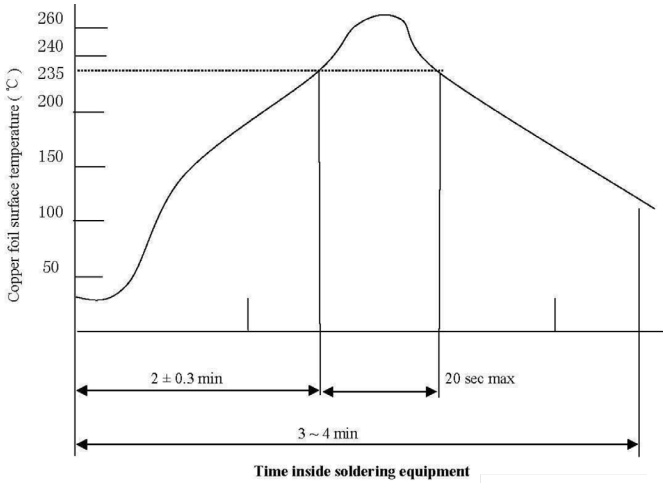

PACKAGING

units: mm

Reel Size: Ø330 mm
Reel QTY: 800 pcs per reel

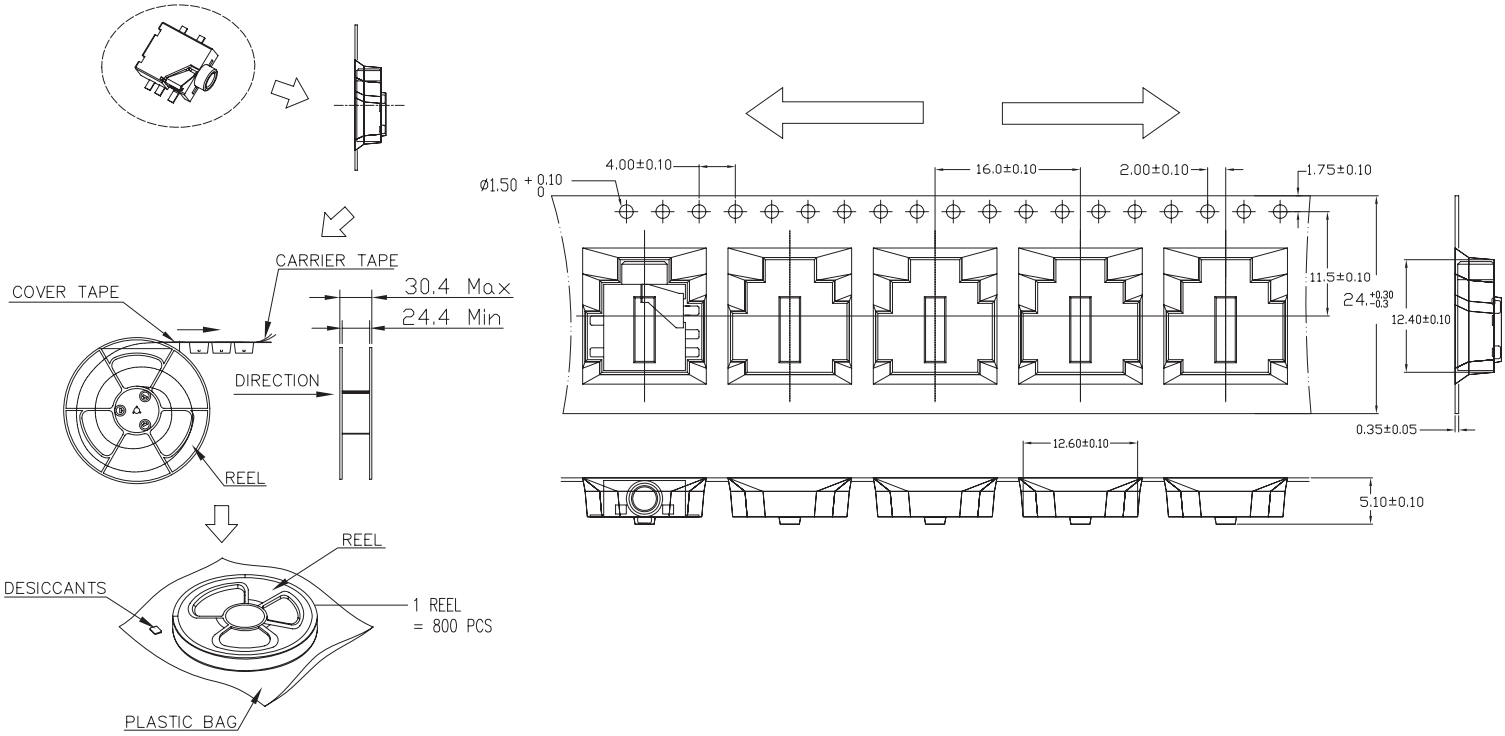

REVISION HISTORY

rev.	description	date
1.0	initial release	02/07/2006
1.01	new template applied	01/25/2012
1.02	added TR package option	11/01/2012
1.03	added model, updated datasheet	12/07/2016
1.04	added storage and drying conditions	01/03/2018
1.05	brand update	10/04/2019
1.06	discontinued models SJ1-2514-SMT-TR & SJ1-2513C-SMT-TR; logo, datasheet style update	08/17/2022
1.07	product reengineered for improved manufacturability and production yield, see PCN for details	04/26/2023

The revision history provided is for informational purposes only and is believed to be accurate.

CUI Devices offers a one (1) year limited warranty. Complete warranty information is listed on our website.

CUI Devices reserves the right to make changes to the product at any time without notice. Information provided by CUI Devices is believed to be accurate and reliable. However, no responsibility is assumed by CUI Devices for its use, nor for any infringements of patents or other rights of third parties which may result from its use.

CUI Devices products are not authorized or warranted for use as critical components in equipment that requires an extremely high level of reliability. A critical component is any component of a life support device or system whose failure to perform can be reasonably expected to cause the failure of the life support device or system, or to affect its safety or effectiveness.