CUDEVICES

SERIES: SDR | DESCRIPTION: STANDARD DIN CONNECTOR

FEATURES

- right angle
- metal bushing
- strain relief

RoHS

PART NUMBER KEY

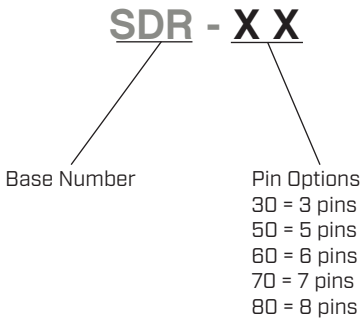

SPECIFICATIONS

parameter	conditions/description	min	typ	max	units
rated input voltage			100		Vac
rated input current				1	A
contact resistance				30	mΩ
insulation resistance	at 500 Vdc	100			MΩ
voltage withstand	for 1 minute			250	Vac
operating temperature		-20		70	°C
life			5,000		cycles
RoHS	yes				

MECHANICAL DRAWINGS

units: mm[inches]
tolerance: ±0.2 mm

	MATERIAL	PLATING
pins	brass	nickel
shell contact 1	steel	nickel
shell contact 2	steel	nickel
cap	polyethylene	
insulator	ABS resin	
cable protector	PVC	

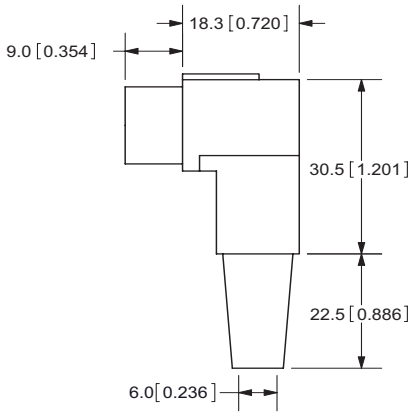

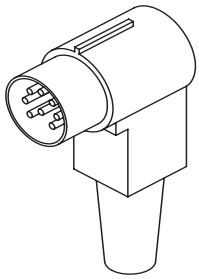

SDR-30

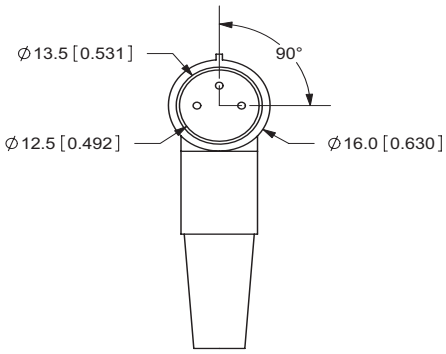

SDR-50

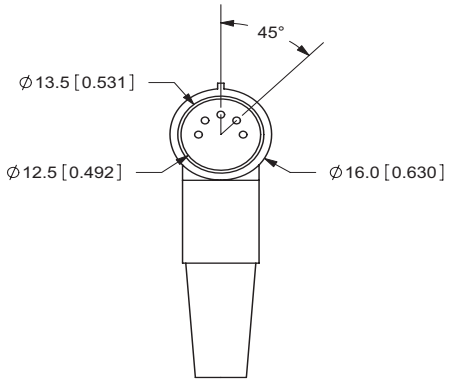

SDR-60

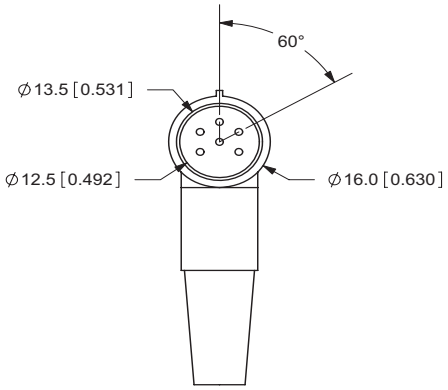

SDR-70

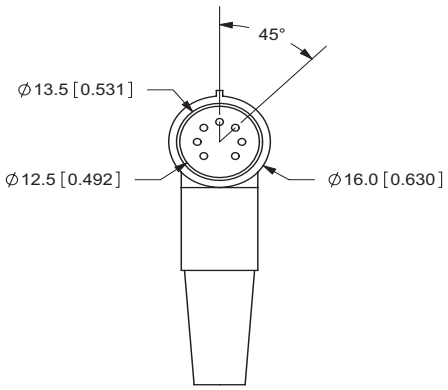

SDR-80

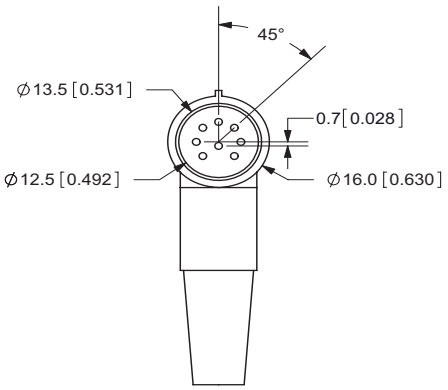

REVISION HISTORY

rev.	description	date
1.0	initial release	09/01/2006
1.01	new template applied	01/30/2012
1.02	corrected center pin positioning on SDR-80, updated drawing	04/23/2015
1.03	updated datasheet	09/08/2017
1.04	brand update	02/19/2020
1.05	logo, datasheet style update	08/05/2022

The revision history provided is for informational purposes only and is believed to be accurate.

CUI Devices offers a one (1) year limited warranty. Complete warranty information is listed on our website.

CUI Devices reserves the right to make changes to the product at any time without notice. Information provided by CUI Devices is believed to be accurate and reliable. However, no responsibility is assumed by CUI Devices for its use, nor for any infringements of patents or other rights of third parties which may result from its use.

CUI Devices products are not authorized or warranted for use as critical components in equipment that requires an extremely high level of reliability. A critical component is any component of a life support device or system whose failure to perform can be reasonably expected to cause the failure of the life support device or system, or to affect its safety or effectiveness.

cuidevices.com