# SERIES: RDS-1045-SMT | DESCRIPTION: ROTARY DIP SWITCH

## FEATURES

- 10 and 16 positions
- flat actuator
- gold plated terminals
- surface mount
- tube or tape and reel packaging

RoHS

## SPECIFICATIONS

| parameter | conditions/description | min | typ | max | units |
|---|---|---|---|---|---|
| rated voltage | switching<br>non-switching | | | 24<br>50 | Vdc<br>Vdc |
| rated current | switching<br>non-switching | | | 25<br>100 | mA<br>mA |
| withstanding voltage | for 1 minute | | 250 | | Vac |
| contact resistance | initial<br>after life test | | | 50<br>100 | mΩ<br>mΩ |
| insulation resistance | at 250 Vdc | 100 | | | MΩ |
| operating torque | | | | 500 | gf*cm |
| dial travel | continuous rotation | | 360 | | degrees |
| operating temperature | | -40 | | 85 | °C |
| storage temperature | | -40 | | 85 | °C |
| life | | 10,000 | | | steps |
| flammability rating | UL94V-0 | | | | |
| RoHS | yes | | | | |

## PART NUMBER KEY

**RDS - XXS - 1045 - SMT - XX**

- RDS: Base Number
- XXS: No. of Positions: 10 =10 Positions; 16 =16 Positions
- XX: Packaging: "blank" = Tube; TR = Tape and Reel

## MECHANICAL DRAWING

units: mm
tolerance:
X≤0.5: ±0.25 mm
0.5<X≤3.0: ±0.15 mm
3.0<X≤6.0: ±0.20 mm
6.0<X≤30.0: ±0.25 mm
30.0<X≤120.0: ±0.30 mm
120.0<X≤400.0: ±0.50 mm
X>400.0: ±0.80 mm
unless otherwise noted

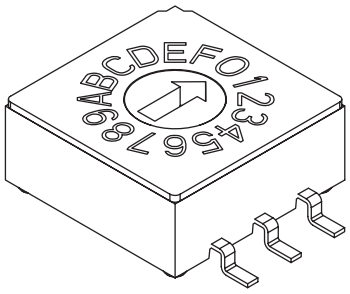


| ITEM | DESCRIPTION | MATERIAL | PLATING/COLOR |
|---|---|---|---|
| 1 | dial | PA9T (UL94V-0) | gray |
| 2 | housing | PA9T (UL94V-0) | black |
| 3 | base | PA9T (UL94V-0) | black |
| 4 | terminals | copper alloy | gold |

**10 POSITION**

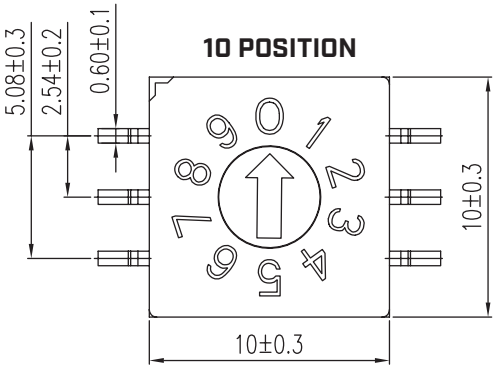


**16 POSITION**

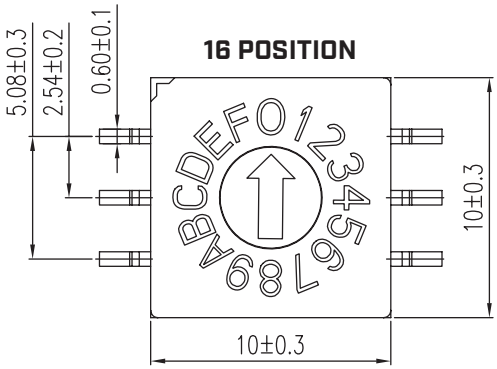


| ON ○ | | | | | |
|---|---|---|---|---|---|
| OFF ● | | CODE | | | |
| TYPE | POS | 1 | 2 | 4 | 8 |
| 10 STEP | 0 | ● | ● | ● | ● |
| | 1 | ○ | ● | ● | ● |
| | 2 | ● | ○ | ● | ● |
| | 3 | ○ | ○ | ● | ● |
| | 4 | ● | ● | ○ | ● |
| | 5 | ○ | ● | ○ | ● |
| | 6 | ● | ○ | ○ | ● |
| | 7 | ○ | ○ | ○ | ● |
| | 8 | ● | ● | ● | ○ |
| | 9 | ○ | ● | ● | ○ |
| 16 STEP | A | ● | ○ | ● | ○ |
| | B | ○ | ○ | ● | ○ |
| | C | ● | ● | ○ | ○ |
| | D | ○ | ● | ○ | ○ |
| | E | ● | ○ | ○ | ○ |
| | F | ○ | ○ | ○ | ○ |

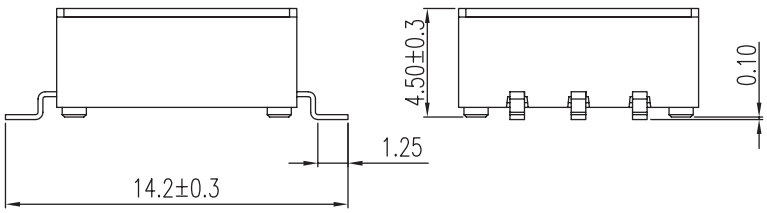


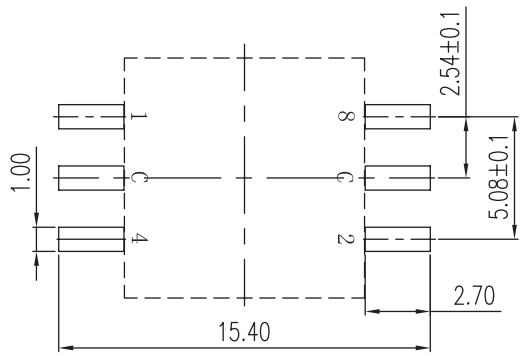


Recommended PCB Layout
Top View

## SOLDERABILITY

| parameter | conditions/description | min | typ | max | units |
|---|---|---|---|---|---|
| hand soldering | for maximum 3 seconds | 315 | 320 | 325 | °C |
| reflow soldering[1] | 240~260 °C (20 seconds max) | | | 260 | °C |

Notes: 1. It is recommended to reflow solder within 6 months.

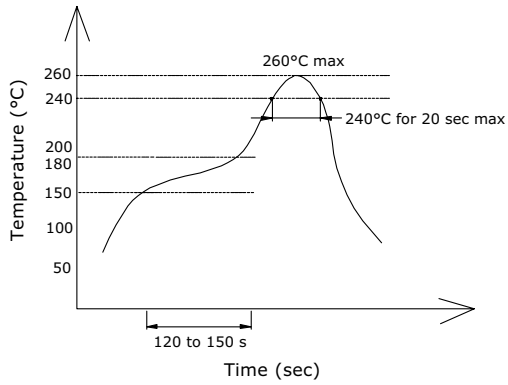


## PACKAGING (TUBE)

units: mm

Tube Size: 17.50 x 12.50 x 500 mm
Tube QTY: 47 pcs

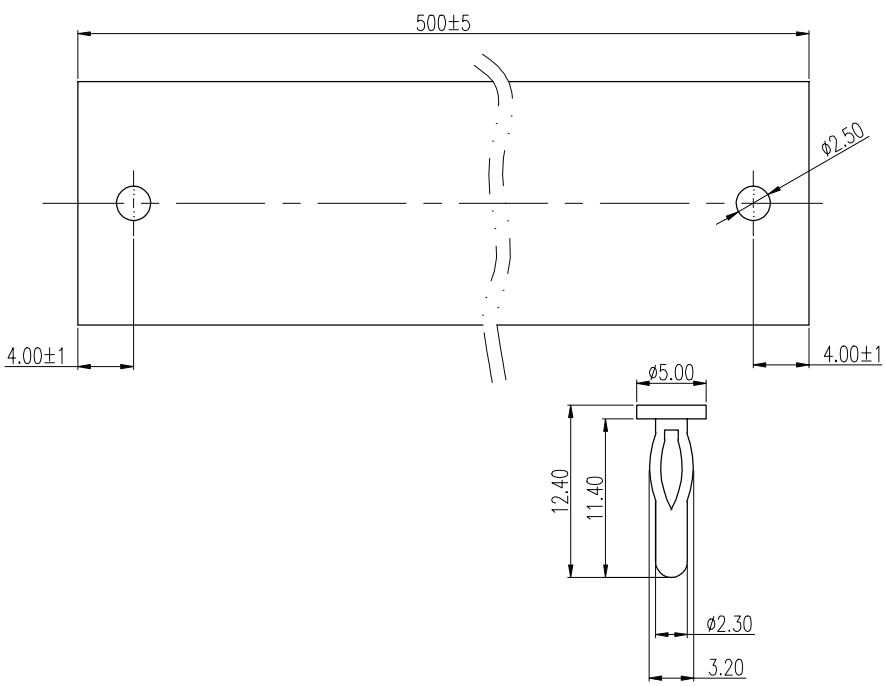


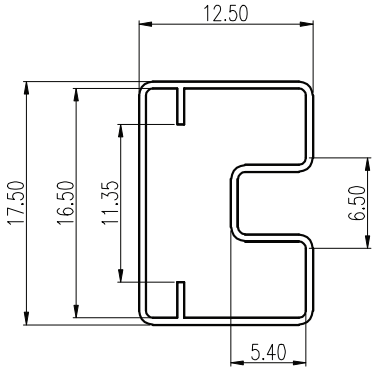

## PACKAGING (TAPE & REEL)

units: mm

Reel Size: Ø330 mm
Reel QTY: 450 pcs

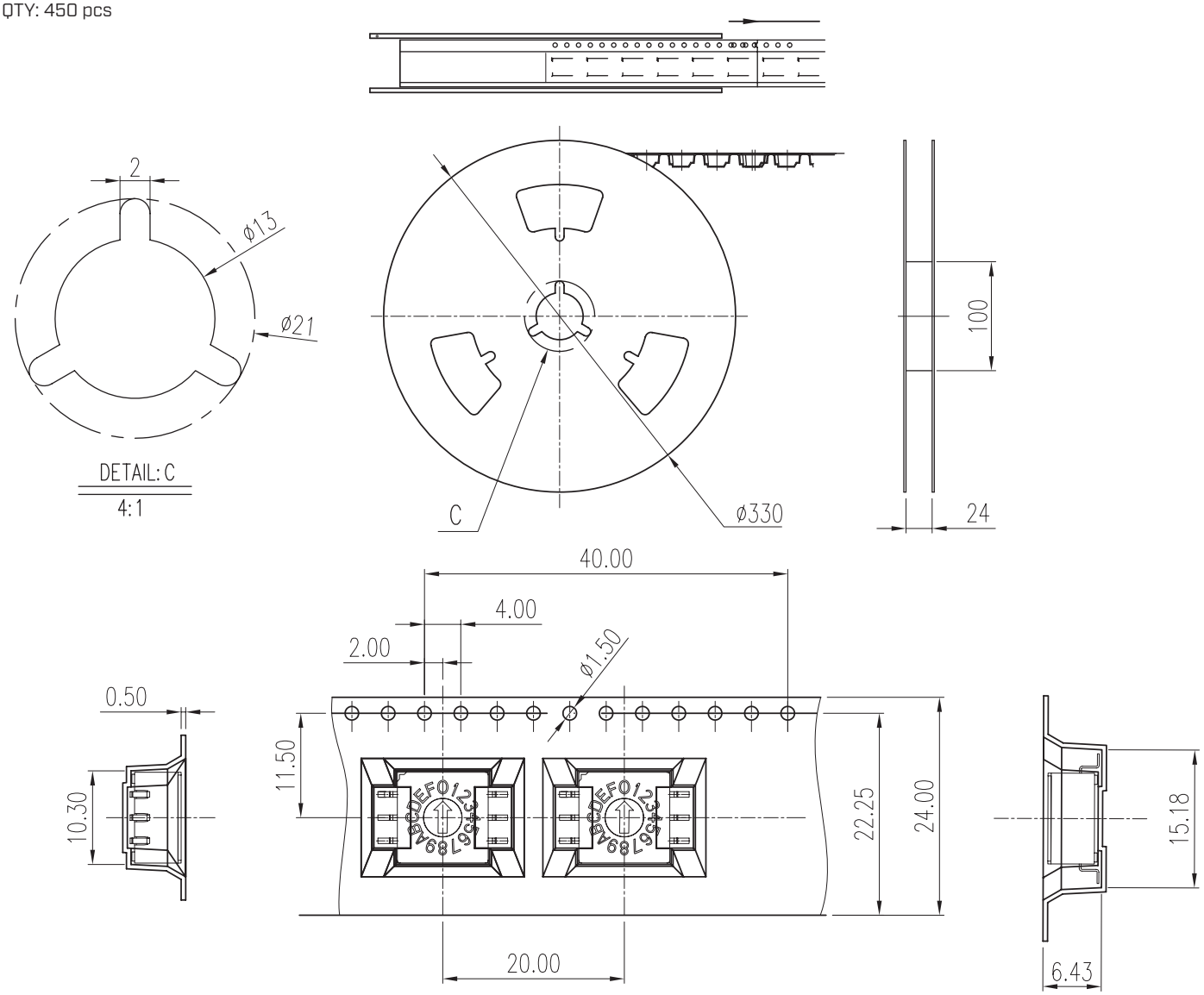

## REVISION HISTORY

| rev. | description | date |
|---|---|---|
| 1.0 | initial release | 05/21/2020 |
| 1.01 | logo, datasheet style update | 08/05/2022 |

The revision history provided is for informational purposes only and is believed to be accurate.

CUI Devices offers a one (1) year limited warranty. Complete warranty information is listed on our website.

CUI Devices reserves the right to make changes to the product at any time without notice. Information provided by CUI Devices is believed to be accurate and reliable. However, no responsibility is assumed by CUI Devices for its use, nor for any infringements of patents or other rights of third parties which may result from its use.

CUI Devices products are not authorized or warranted for use as critical components in equipment that requires an extremely high level of reliability. A critical component is any component of a life support device or system whose failure to perform can be reasonably expected to cause the failure of the life support device or system, or to affect its safety or effectiveness.

**cuidevices.com**