CUDEVICES

MODEL: GA0771M | **DESCRIPTION:** SPEAKER

FEATURES

- 77 mm
- round frame
- 1.0 W
- 8 Ω
- alnico magnet
- PET cone

RoHS

SPECIFICATIONS

parameter	conditions/description	min	typ	max	units
input power			1.0	2.0	W
impedance	at 0.8 kHz, 1.0 V	6.8	8	9.2	Ω
resonant frequency (Fo)	at 1.0 V	240	300	360	Hz
frequency response		Fo		20,000	Hz
sound pressure level	at 1.0 W, 50 cm, avg 1.5, 2.0, 2.5, 3.0 kHz	87	90	93	dB
buzz, rattle, etc.	must be normal at sine wave			2.83	V
dimensions	Ø77 x 25.5				mm
magnet	alnico				
cone material	PET				
terminal	solder eyelets				
weight			53.0		g
operating temperature		-25		60	°C
hand soldering	for maximum 3 seconds	360	380	400	°C
RoHS	yes				

MECHANICAL DRAWING

units: mm
tolerance: ±0.8 mm

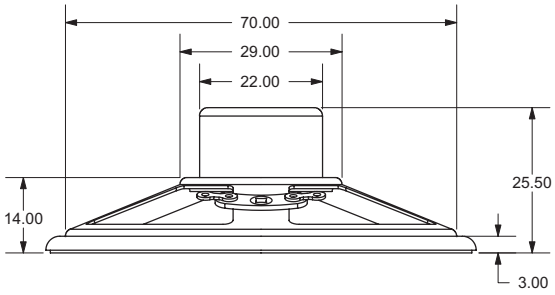

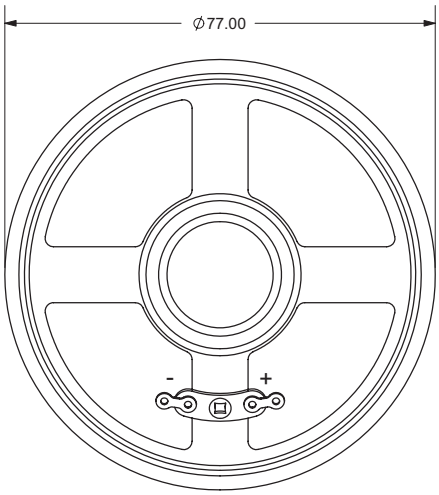

FREQUENCY RESPONSE CURVE

parameter	conditions/description
potentiometer range	50 dB
rectifier	RMS
lower limit frequency	20 Hz
wr. speed	100 mm/sec
zero level	60 dB

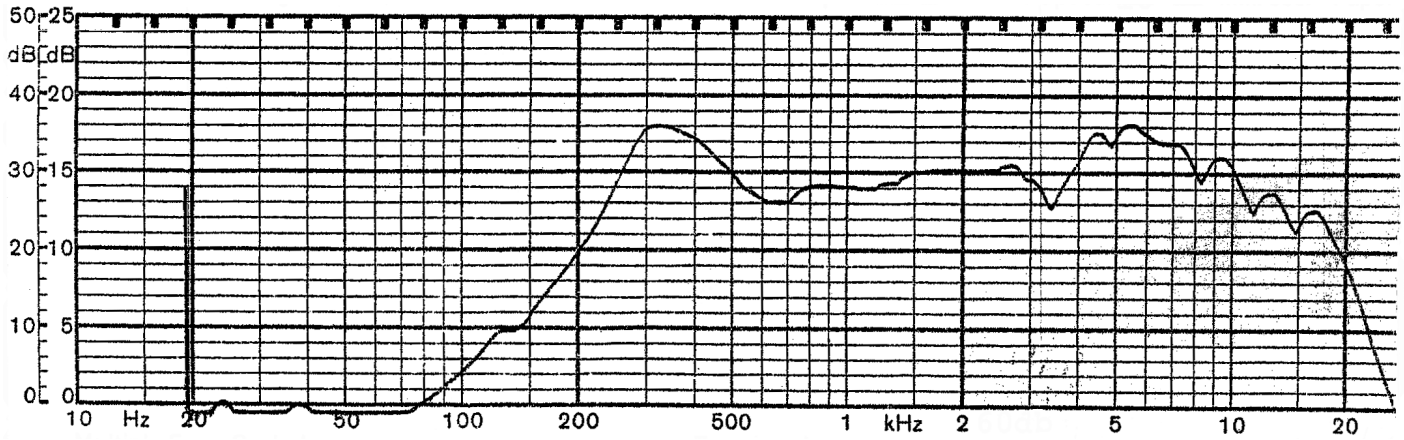

REVISION HISTORY

rev.	description	date
1.0	initial release	09/29/2006
1.01	brand update	06/04/2020
1.02	logo, datasheet style update	08/05/2022

The revision history provided is for informational purposes only and is believed to be accurate.

CUI Devices offers a one (1) year limited warranty. Complete warranty information is listed on our website.

CUI Devices reserves the right to make changes to the product at any time without notice. Information provided by CUI Devices is believed to be accurate and reliable. However, no responsibility is assumed by CUI Devices for its use, nor for any infringements of patents or other rights of third parties which may result from its use.

CUI Devices products are not authorized or warranted for use as critical components in equipment that requires an extremely high level of reliability. A critical component is any component of a life support device or system whose failure to perform can be reasonably expected to cause the failure of the life support device or system, or to affect its safety or effectiveness.