CUDEVICES

MODEL: CMT-322-65-SMT-TR | **DESCRIPTION:** MAGNETIC BUZZER TRANSDUCER

FEATURES

- 3.0 Vo-p rated voltage
- 65 dBA

RoHS

SPECIFICATIONS

parameter	conditions/description	min	typ	max	units
rated voltage	Vo-p 0V		3.0		Vo-p
operating voltage		2.0		4.0	Vo-p
current consumption	at rated voltage, 4,000 Hz, ½ duty square wave			120	mA
rated frequency			4,000		Hz
sound pressure level	at 10 cm, rated voltage, 4,000 Hz, ½ duty square wave	65			dBA
coil resistance		9	12	15	Ω
dimensions	3.2 x 3.2 x 2.0				mm
weight			0.1		g
material	LCP				
terminal	surface mount (tin plating)				
operating temperature		-20		70	°C
storage temperature		-30		80	°C
washable	no				
RoHS	yes				

Notes: 1. All specifications measured at 5~35°C, humidity at 45~85%, under 86~106 kPa pressure, unless otherwise noted.

SOLDERABILITY

parameter	conditions/description	min	typ	max	units
reel storage	at relative humidity <40%			25	°C
reflow soldering[2]	see recommended reflow soldering profile			260	°C
drying conditions[3]	bake at 40°C for 24 hours				

Note: 2. It is recommended to reflow solder within 48 hours from opening vacuum packaging at a temperature <30°C & relative humidity <60%.
3. When out of packaging for more than 48 hours.

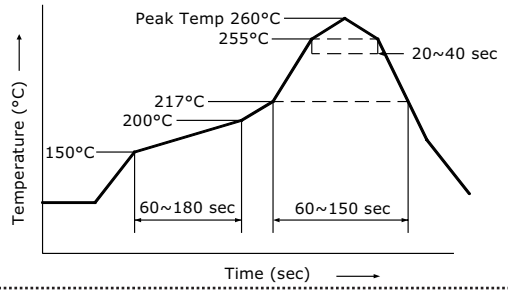

MECHANICAL DRAWING

units: mm
tolerance: ±0.5 mm

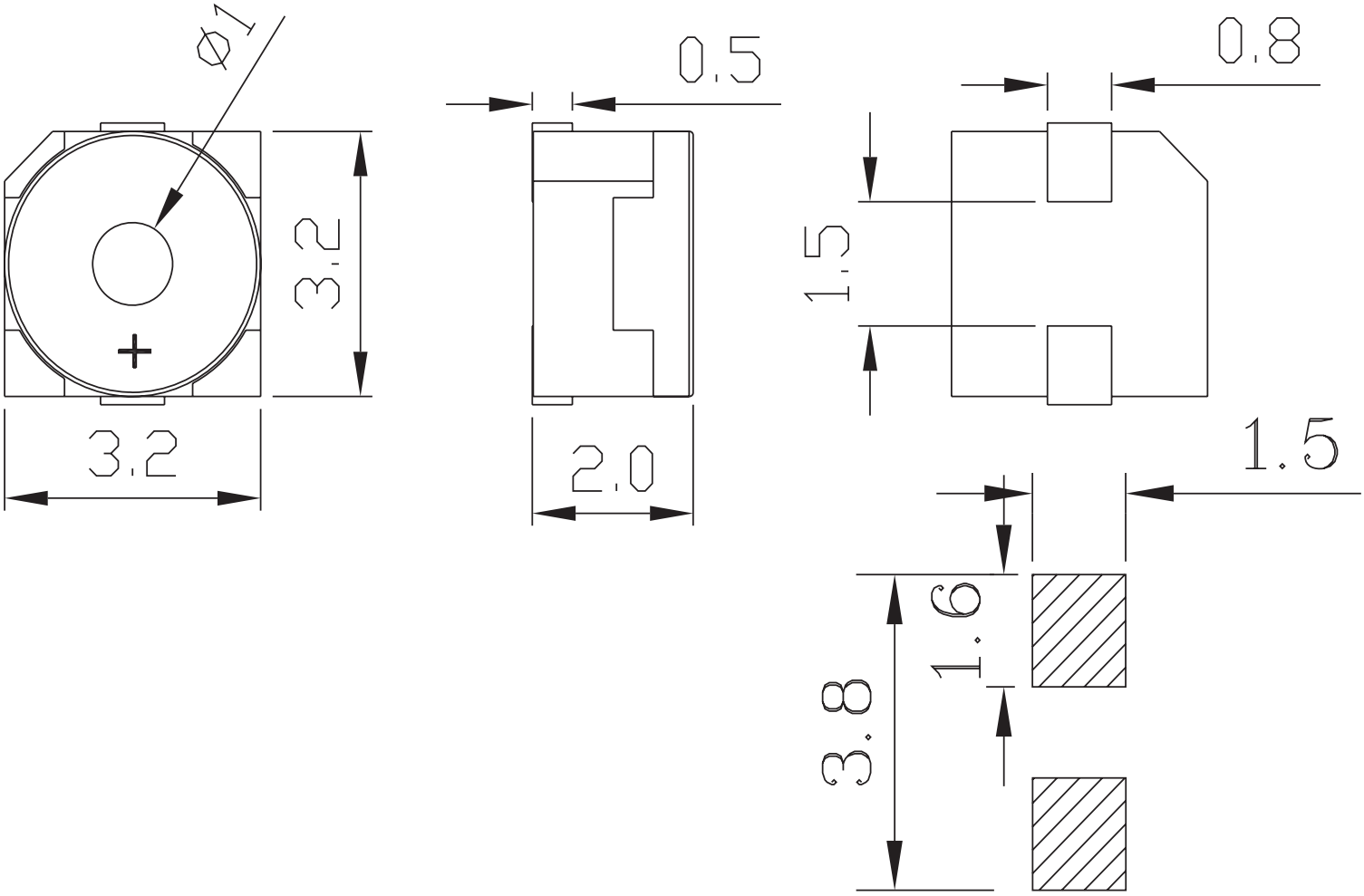

Recommended PCB Layout
Top View

FREQUENCY RESPONSE CURVE

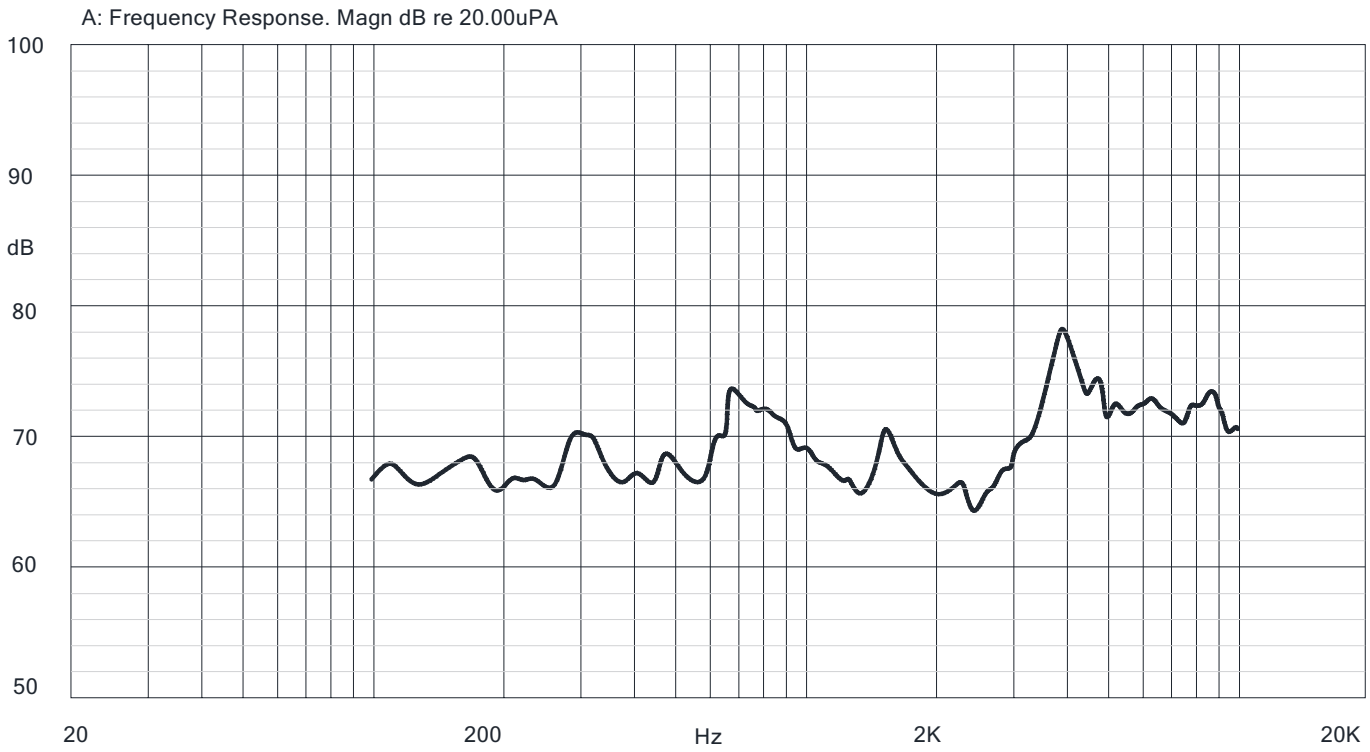

APPLICATION CIRCUIT

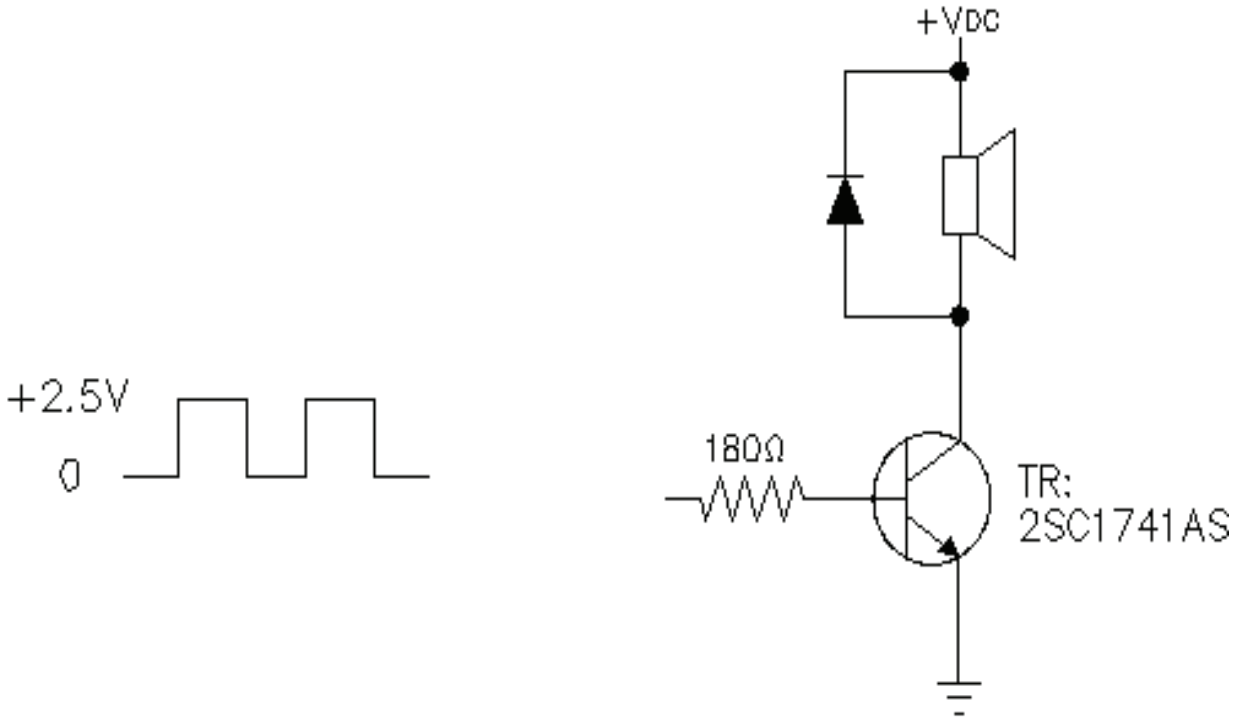

PACKAGING

units: mm

Inner Carton Size: 330 x 330 x 30 mm
Carton Size: 350 x 350 x 370 mm
Inner Carton QTY: 1,000 pcs per reel
Carton QTY: 10,000 pcs per carton

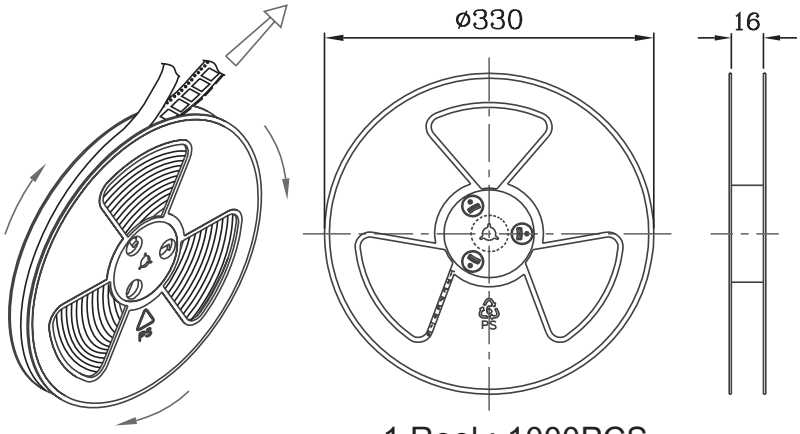

1 Reel : 1000PCS

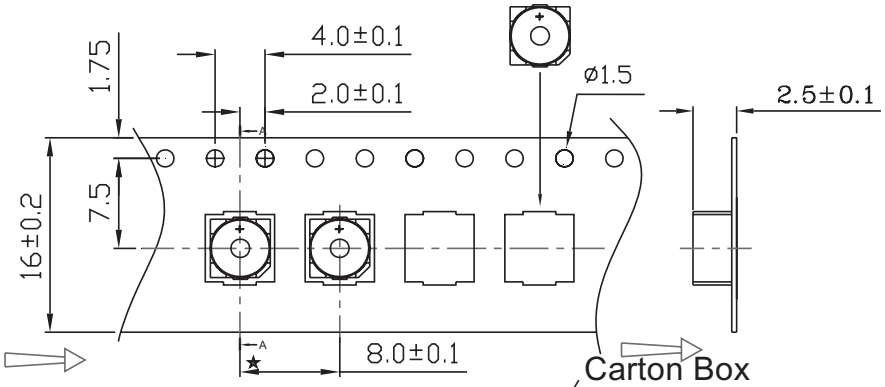

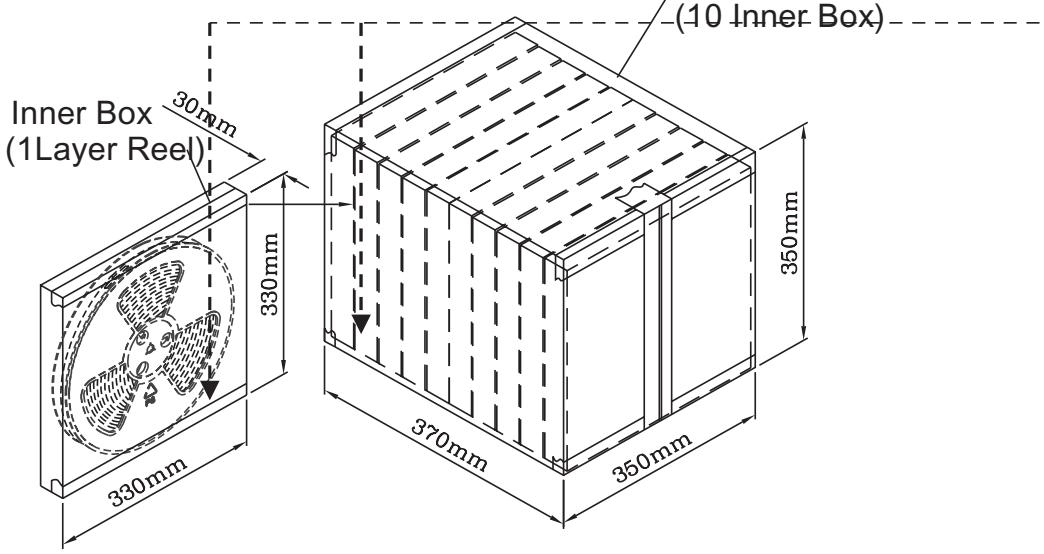

Lot No.	XXXXXXXXXX
Part No.	XXXXXXXXXX XXXXXXXXXX
Quantity.	XXXX Pcs
Date: DD MM YY	RoHs Compliant
MADE IN CHINA	
CUI DEVICES	

REVISION HISTORY

rev.	description	date
1.0	initial release	07/07/2021
1.01	logo, datasheet style update	08/05/2022

The revision history provided is for informational purposes only and is believed to be accurate.

CUI Devices offers a one (1) year limited warranty. Complete warranty information is listed on our website.

CUI Devices reserves the right to make changes to the product at any time without notice. Information provided by CUI Devices is believed to be accurate and reliable. However, no responsibility is assumed by CUI Devices for its use, nor for any infringements of patents or other rights of third parties which may result from its use.

CUI Devices products are not authorized or warranted for use as critical components in equipment that requires an extremely high level of reliability. A critical component is any component of a life support device or system whose failure to perform can be reasonably expected to cause the failure of the life support device or system, or to affect its safety or effectiveness.