CUDEVICES

MODEL: CMS-4021-34SP-X5 | **DESCRIPTION:** SPEAKER

FEATURES

- IPX5 rated
- rated 3.0 W
- 4 Ω

SPECIFICATIONS

parameter	conditions/description	min	typ	max	units
input power	max power: as per IEC-268-5		3.0	5.0	W
impedance	at 1.0 kHz, 1 V	3.4	4	4.6	Ω
resonant frequency (Fo)	at 1 V	144	180	216	Hz
frequency response		Fo		20,000	Hz
sound pressure level	at 1 W, 50 cm, avg 0.8, 1.0. 1.6, 2.0 kHz	82	85	88	dB
distortion	at 1 kHz, 1 W			5	%
buzz, rattle, etc.	must be normal at sine wave, frequency range			3.46	V
polarity	cone moves forward w/ positive dc current to “+” terminal				
dimensions	Ø40 x 21				mm
magnet	Nd-Fe-B				
frame material	SPCC				
cone material	PU+paper+PET				
terminal	solder eyelets				
weight			28		g
operating temperature		-20		60	°C
storage temperature		-20		60	°C
hand soldering	for maximum 3 seconds			380	°C
RoHS	yes				
IP level	IPX5 (front side)				

Notes: 1. All specifications measured at 15~35°C, humidity at 25~75%, under 86~106 kPa pressure, unless otherwise noted.

MECHANICAL DRAWING

units: mm
tolerance: ±0.5 mm

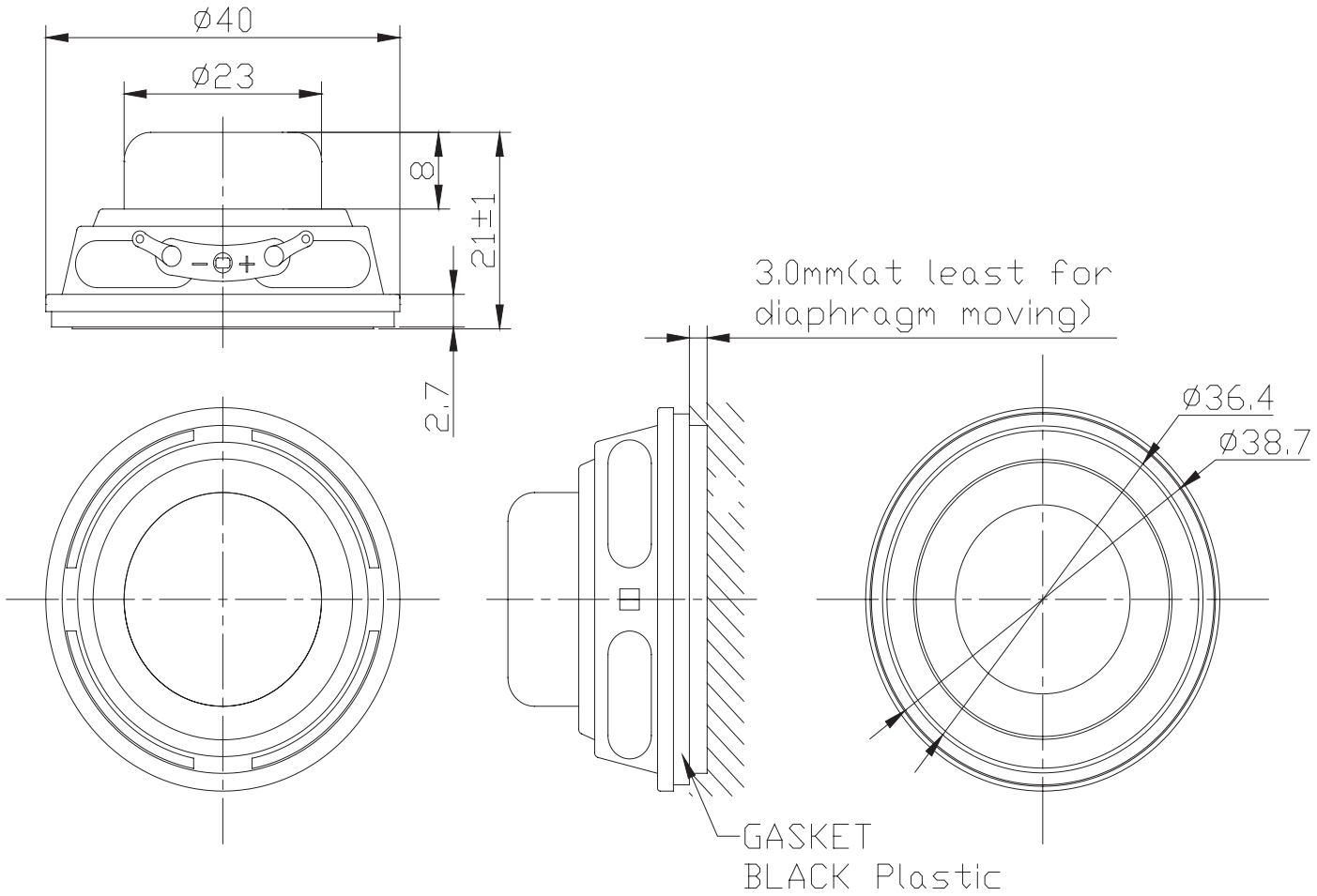

RESPONSE CURVES

Frequency Response Curve

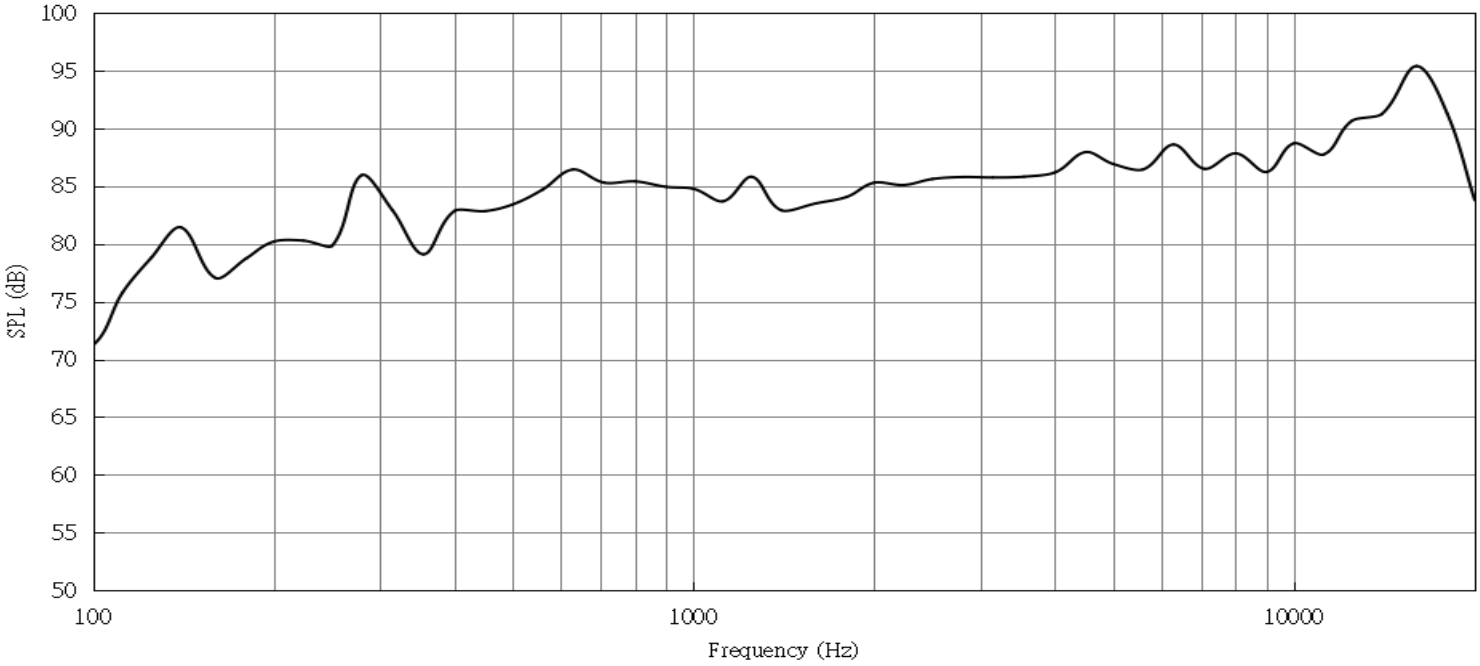

Total Harmonic Distortion Curve

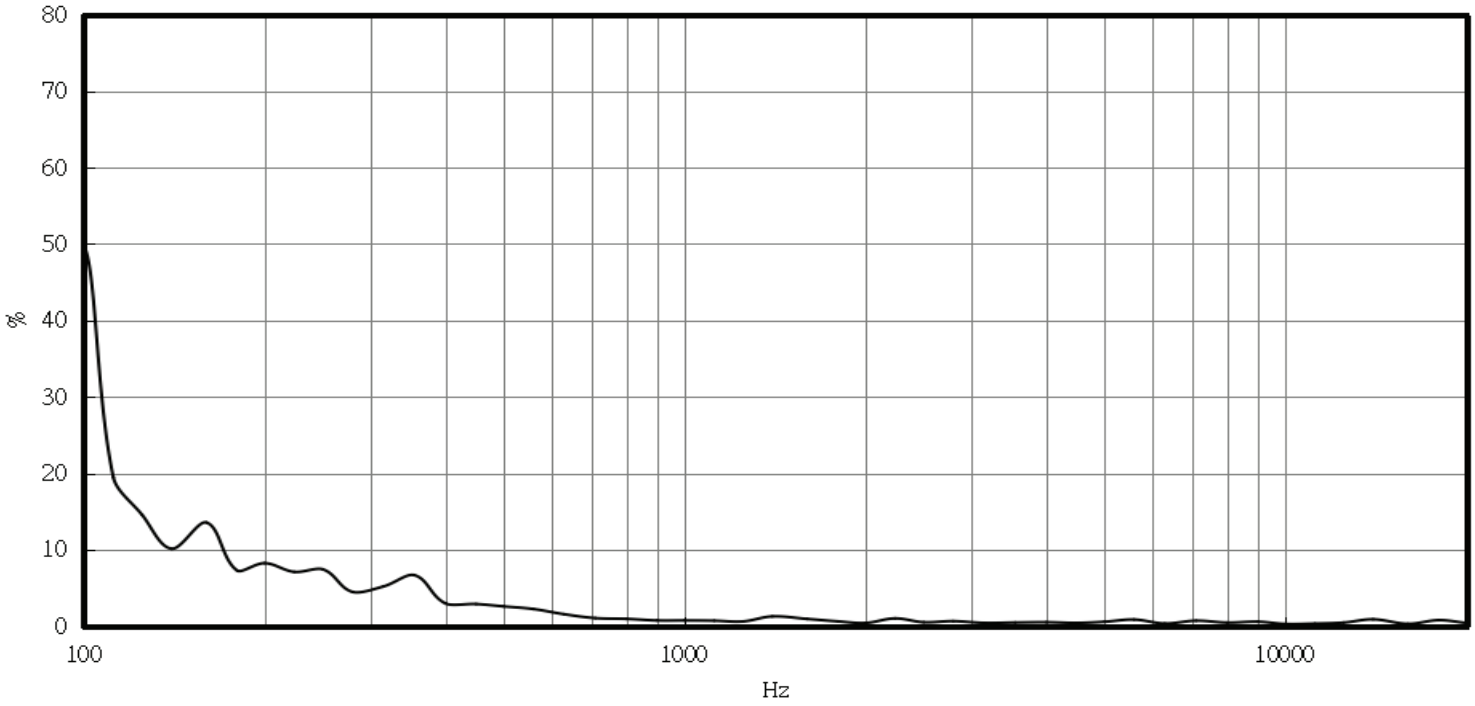

PACKAGING

units: mm

Tray QTY: 60 pcs per tray
Carton Size: 390 x 350 x 430 mm
Carton QTY: 300 pcs per carton

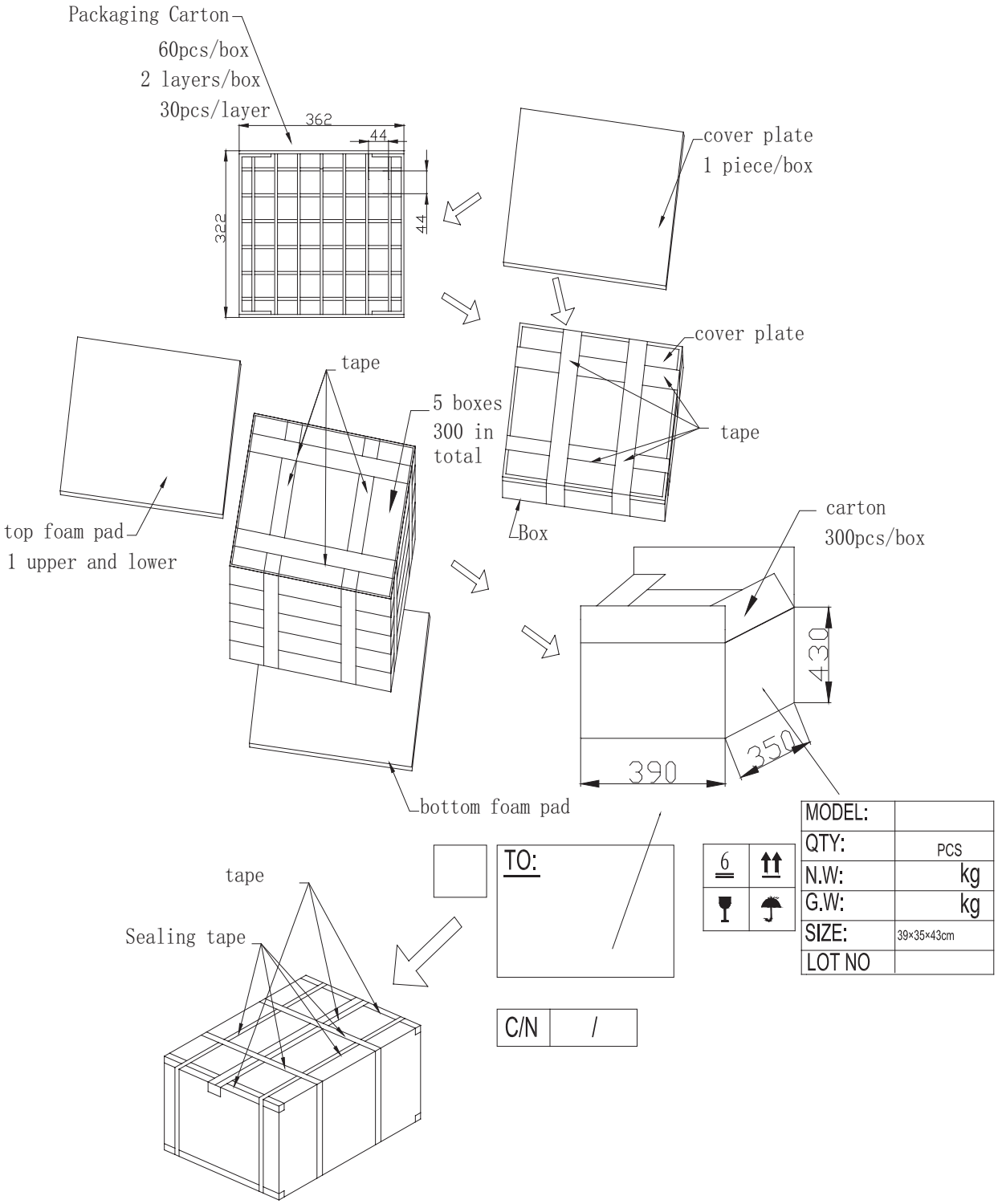

REVISION HISTORY

rev.	description	date
1.0	initial release	03/22/2023

The revision history provided is for informational purposes only and is believed to be accurate.