MODEL: CMS-20103-078SP | DESCRIPTION: SPEAKER

FEATURES

- 8 ohm rated impedance
- 0.7 W rated power
- 500 Hz resonance frequency

RoHS

SPECIFICATIONS

parameter	conditions/description	min	typ	max	units
input power	max power: IEC-60268-5, filter 60 seconds on, 120 seconds off, 10 cycles (room temp)		0.7	1.0	W
impedance	at 2.0 kHz	6.8	8	9.2	Ω
resonant frequency (Fo)	at 1.0 V, in free air	440	550	660	Hz
frequency response		Fo		20,000	Hz
sound pressure level	at 0.7 W, 10 cm, avg at 1.0 kHz in 1 cc closed box	87	90	93	dB
distortion	at 1.0 kHz, rated power, 0.1 m, in 1 cc closed box			10	%
buzz, rattle, etc.	must be normal at sine wave, Fo~10 kHz, in 1 cc closed box			2.36	V
polarity	cone moves forward w/ positive dc current to "+" terminal				
dimensions	20.0 x 10.0 x 3.0				mm
magnet	Nd-Fe-B				
frame material	PPA				
cone material	PEEK				
terminal	solder pads				
weight			1.7		g
operating temperature		-30		70	°C
storage temperature		-40		80	°C
hand soldering	for maximum 3 seconds	370	380	390	°C
RoHS	yes				

Notes: 1. All specifications measured at 5~35°C, humidity at 45~85%, under 86~106 kPa pressure, unless otherwise noted.

MECHANICAL DRAWING

units: mm
tolerance: ±0.5 mm

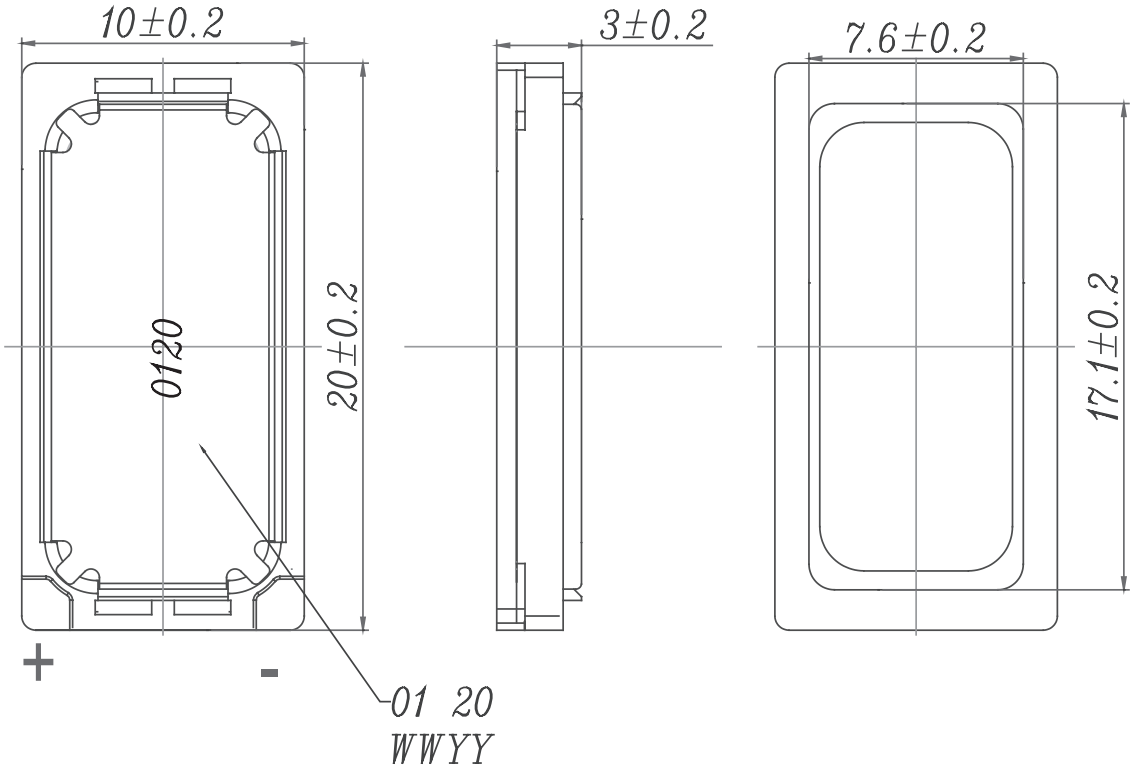

RESPONSE CURVES

Frequency Response Curve

Test Conditions: 0.7 W / 10 cm in 1 cc closed box

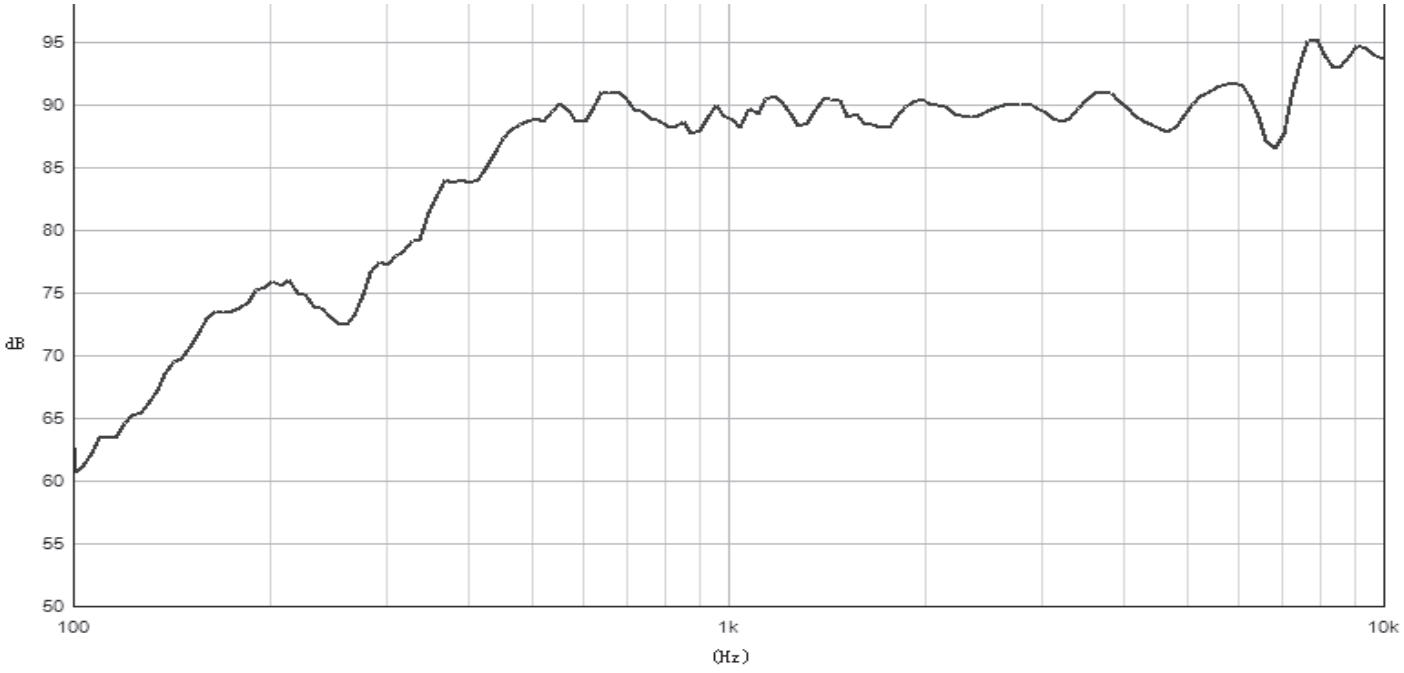

Total Harmonic Distortion Curve

Test Conditions: 0.7 W / 10 cm in 1 cc closed box

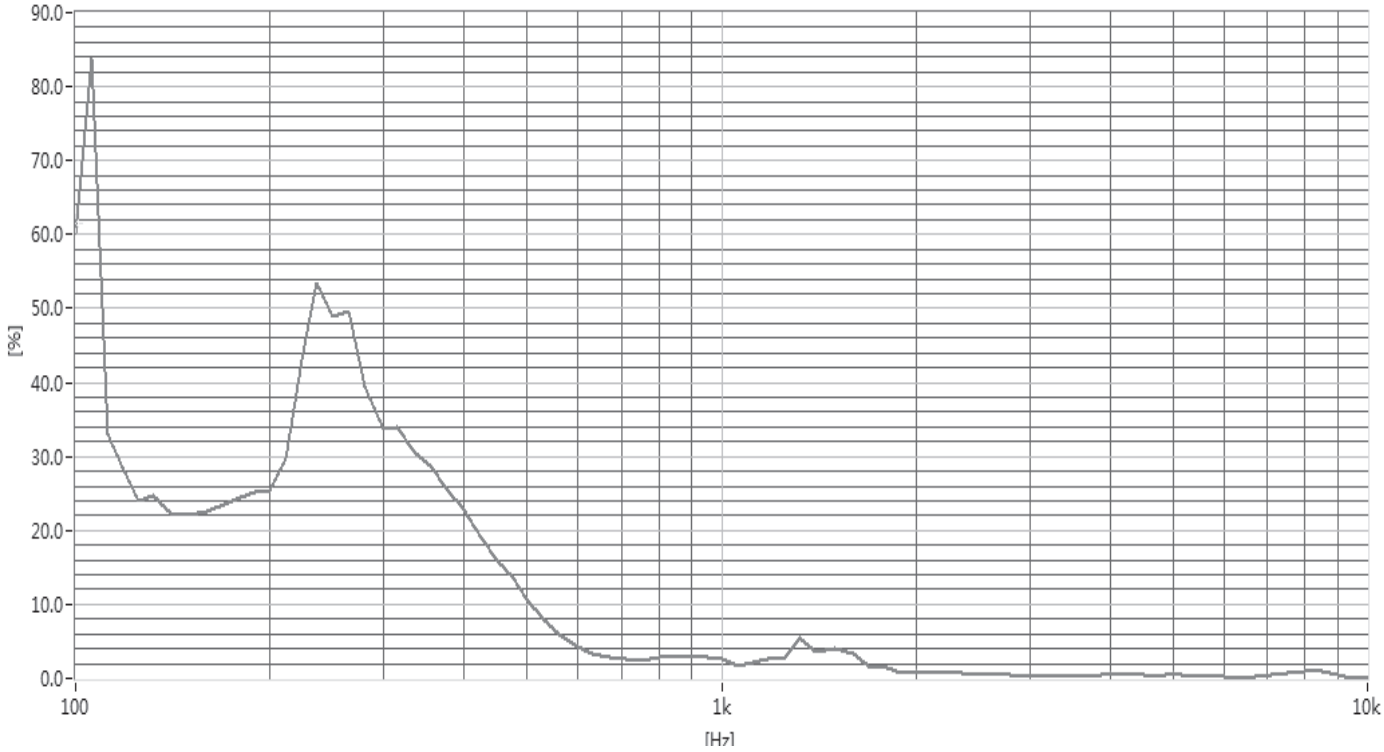

PACKAGING

units: mm

Tray Size: 290 x 220 mm
Tray QTY: 100 pcs per tray
Carton Size: 310 x 240 x 270 mm
Carton QTY: 2,500 pcs per carton

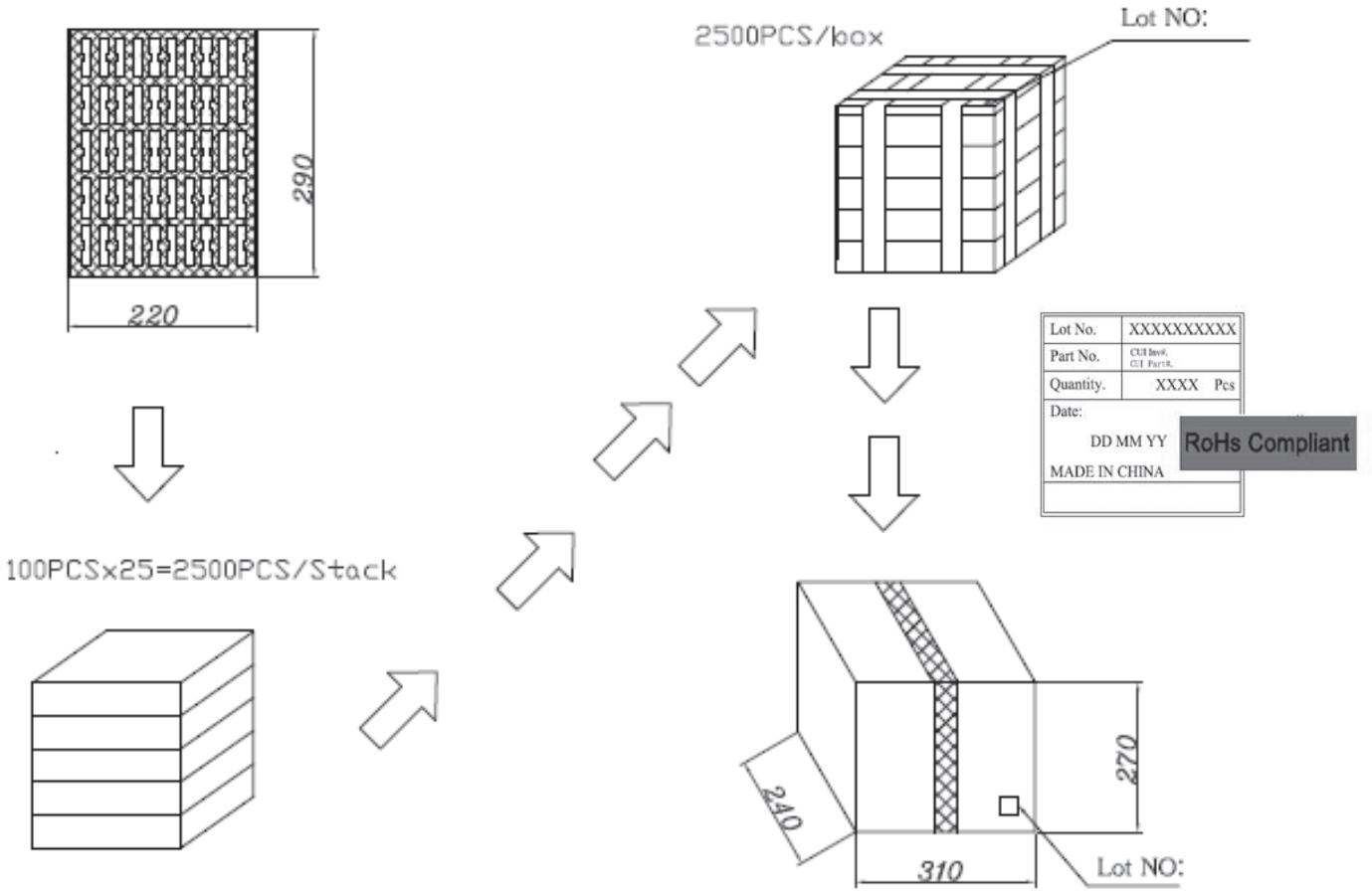

REVISION HISTORY

rev.	description	date
1.0	initial release	06/08/2020
1.01	added date code marking	01/04/2021
1.02	logo, datasheet style update	08/05/2022

The revision history provided is for informational purposes only and is believed to be accurate.

CUI Devices offers a one (1) year limited warranty. Complete warranty information is listed on our website.

CUI Devices reserves the right to make changes to the product at any time without notice. Information provided by CUI Devices is believed to be accurate and reliable. However, no responsibility is assumed by CUI Devices for its use, nor for any infringements of patents or other rights of third parties which may result from its use.

CUI Devices products are not authorized or warranted for use as critical components in equipment that requires an extremely high level of reliability. A critical component is any component of a life support device or system whose failure to perform can be reasonably expected to cause the failure of the life support device or system, or to affect its safety or effectiveness.

cuidevices.com