CUDEVICES

MODEL: CMM-2718AB-38308-TR | **DESCRIPTION:** MEMS MICROPHONE

FEATURES

- analog
- small package
- reflow solder compatible
- omnidirectional

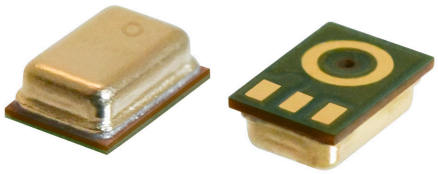

RoHS

ELECTRICAL

parameter	conditions/description	min	typ	max	units
directivity	omnidirectional				
sensitivity (S)	at 94 dB SPL, 1 kHz	-41	-38	-35	dB
supply voltage (V_{DD})		1.6	2.0	3.6	V
current consumption (I_{DSS})	V_{DD} = 2.0 V		75	150	µA
frequency (f)		100		10,000	Hz
signal to noise ratio (S/N)	at 94 dB SPL, 1 kHz (A-weighted)		65		dBA
total harmonic distortion (THD)	at 94 dB SPL, 1 kHz		0.15		%
acoustic overload point (AOP)	at 10% THD, 1 kHz		130		dB SPL
output impedance (Zout)	at 1 kHz			400	Ω
PSRR	200 mVp-p sine wave @ 1 kHz, V_{DD} = 2.0 V		60		dB
PSR	100 mVp-p square wave @ 217 Hz, V_{DD} = 2.0 V		-90		dBV(A)

Notes: 1. All specifications measured at 23±2°C, humidity at 55±20%, unless otherwise noted.

ENVIRONMENTAL

parameter	conditions/description	min	typ	max	units
operating temperature		-40		100	°C
storage temperature	in packaging	-40		85	°C
RoHS	yes				

MECHANICAL

parameter	conditions/description	min	typ	max	units
dimensions	2.75 x 1.85 x 0.95				mm
acoustic port	bottom				
terminals	surface mount				
weight		0.018	0.02	0.022	g

MECHANICAL DRAWING

units: mm
tolerance: ±0.1 mm

TERMINAL CONNECTIONS	
TERM.	FUNCTION
1	output
2	GND
3	VDD
4	GND

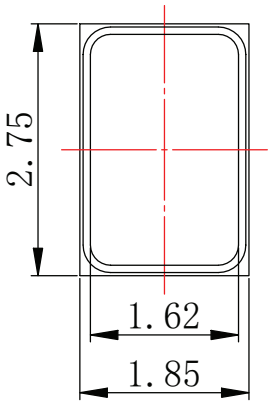

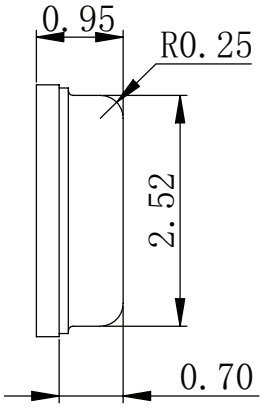

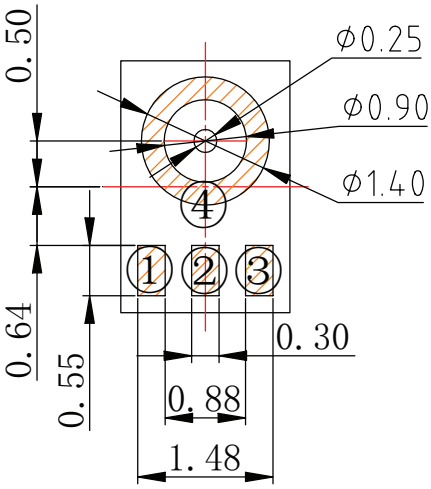

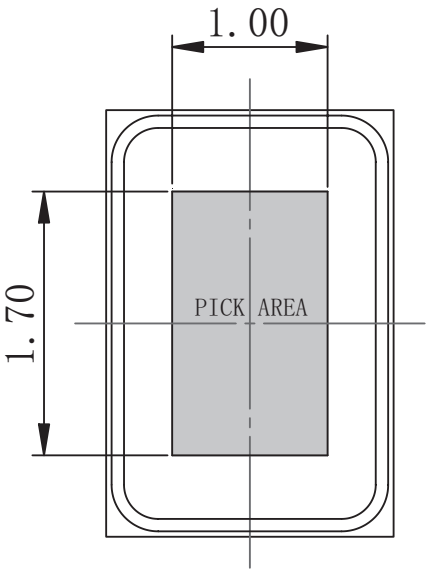

Recommended Vacuum Nozzle Pickup
Top View

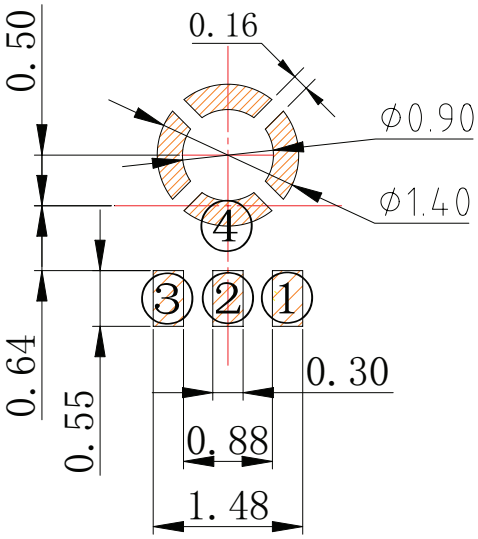

Recommended PCB Layout
Top View

FREQUENCY RESPONSE CURVE

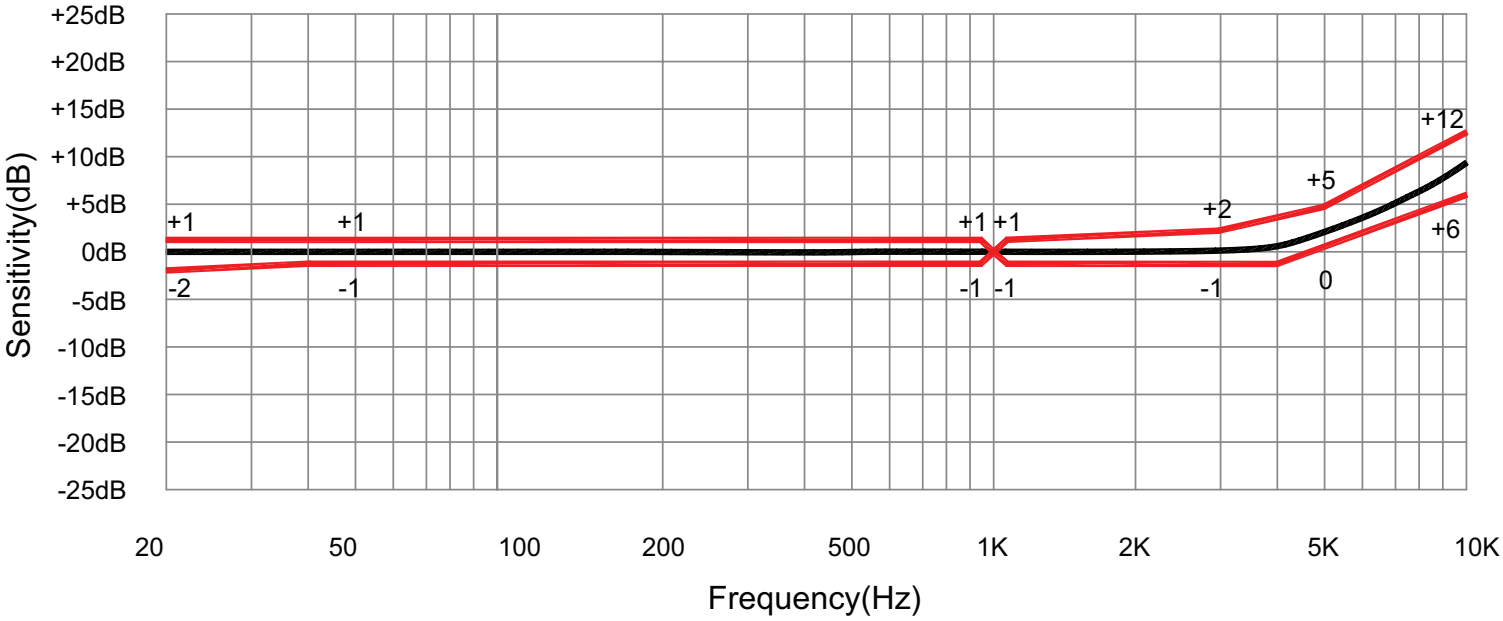

APPLICATION CIRCUIT

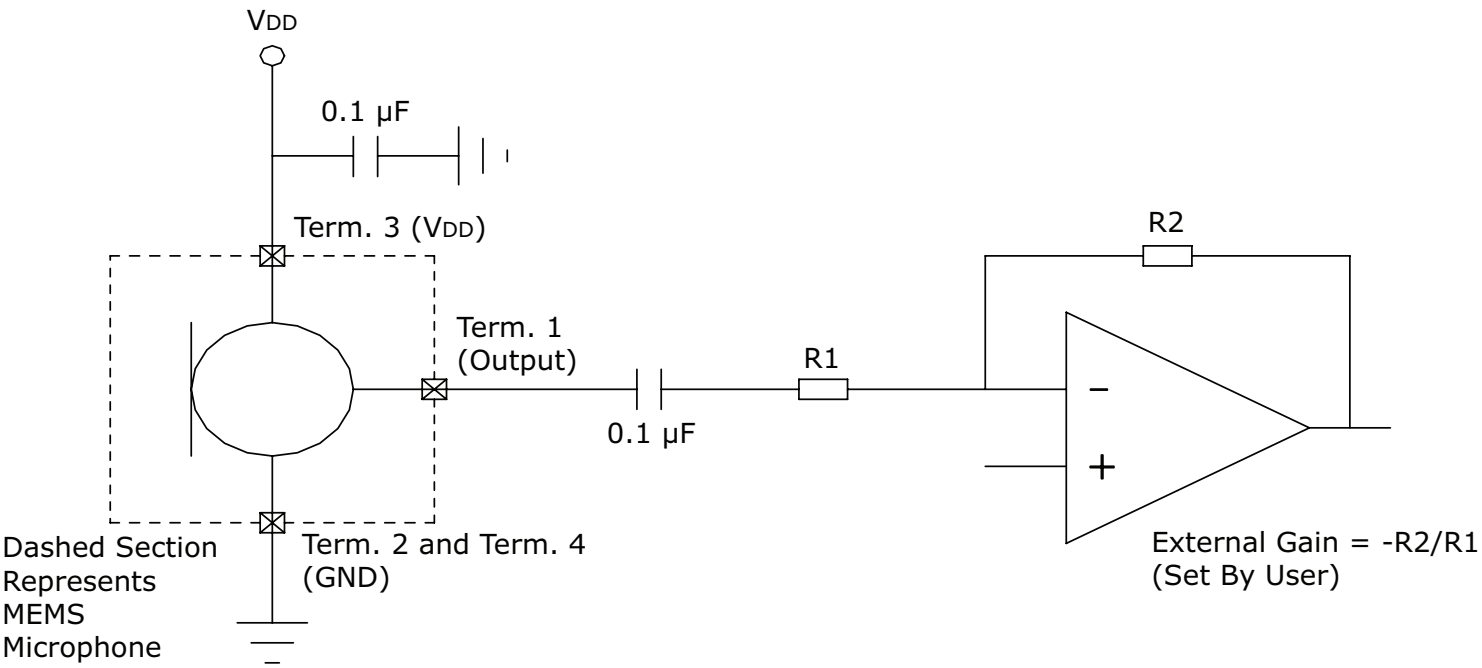

SOLDERABILITY

parameter	conditions/description	min	typ	max	units
reflow soldering	see reflow profile			260	°C

Note:
1. Vacuuming over acoustical hole is not allowed.
2. Not suitable for wash process.
3. Not recommended to exceed 5 reflow cycles.

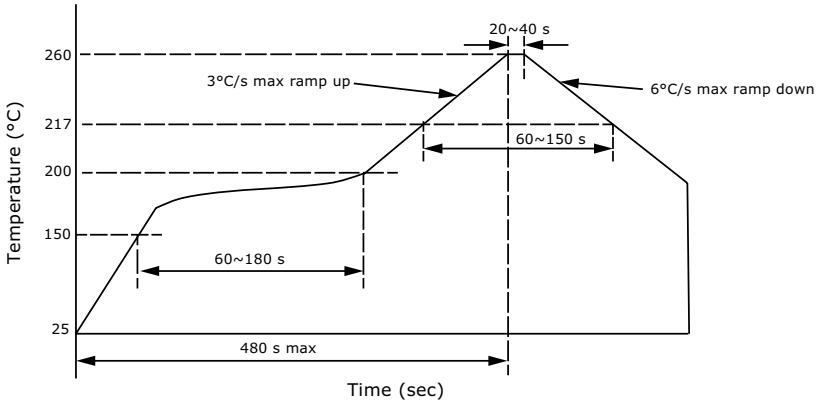

PACKAGING

parameter	conditions/description	min	typ	max	units
reel storage[4]	at relative humidity <75%	-40		85	°C
MSL	Class 1				
reel size	Ø330 mm max				
reel QTY	5,000 pcs per reel				

Note:
4. Recommended storage period no more than 1 year. Floor life (out of bag) no more than 4 weeks.

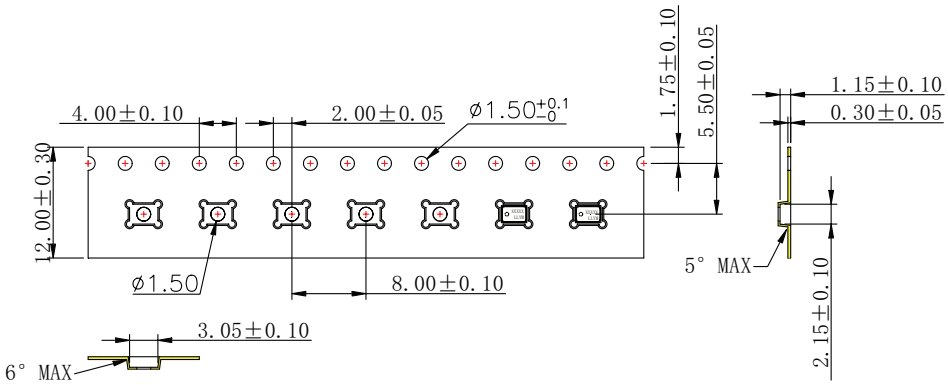

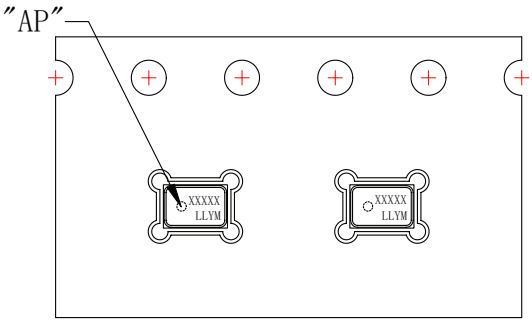

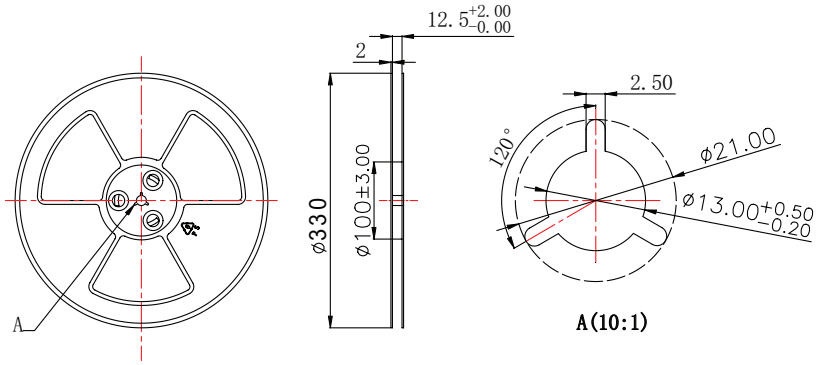

REVISION HISTORY

rev.	description	date
1.0	initial release	11/08/2018
1.01	brand update	01/16/2020
1.02	logo, datasheet style update	08/05/2022
1.03	changed internal chip	07/13/2023

The revision history provided is for informational purposes only and is believed to be accurate.

CUI Devices offers a one (1) year limited warranty. Complete warranty information is listed on our website.

CUI Devices reserves the right to make changes to the product at any time without notice. Information provided by CUI Devices is believed to be accurate and reliable. However, no responsibility is assumed by CUI Devices for its use, nor for any infringements of patents or other rights of third parties which may result from its use.

CUI Devices products are not authorized or warranted for use as critical components in equipment that requires an extremely high level of reliability. A critical component is any component of a life support device or system whose failure to perform can be reasonably expected to cause the failure of the life support device or system, or to affect its safety or effectiveness.