CUDEVICES

MODEL: CMC-4015-130T | **DESCRIPTION:** ELECTRET CONDENSER MICROPHONE

FEATURES

- high AOP of 130 dB
- omnidirectional
- 4 mm diameter
- solder terminals
- IP67 rated

RoHS

SPECIFICATIONS

parameter	conditions/description	min	typ	max	units
directivity	omnidirectional				
sensitivity (S)	f = 1 kHz, 1 Pa, 0 dB = 1 V/Pa	-45	-42	-39	dB
standard operating voltage (Vs)			2		Vdc
max operating voltage				10	Vdc
output impedance (Zout)	f = 1 kHz, 1 Pa		2.2		kΩ
sensitivity reduction (ΔS-Vs)	f = 1 kHz, 1 Pa, Vs = 2.0 ~ 1.0 Vdc		-3		dB
frequency (f)		100		20,000	Hz
current consumption (I_{DSS})	Vs = 2.0 Vdc, RL = 2.2 kΩ		0.5		mA
signal to noise ratio (S/N)	f = 1 kHz, 1 Pa, A-weighted		60		dBA
acoustic overload point (AOP)	at 1 kHz, THD <10%			130	dB SPL
total harmonic distortion	at 1 kHz, 94 dB SPL			1	%
dimensions	Ø4.0 x 1.5				mm
material	Al				
terminal	solder pads				
weight				0.1	g
operating temperature		-20		70	°C
storage temperature		-20		70	°C
RoHS	yes				
IP level	IP67 (IEC standard 529 edition 2.0 (1989))				

Notes:
1. We use the "Pascal (Pa)" indication of sensitivity as per the recomendation of I.E.C. (International Electrotechnical Commission). The sensitivity of "Pa" will increase 20 dB compared to the "ubar" indication. Example: -60 dB (0 dB = 1 V/ubar) = -40 dB (1V/Pa)
2. All specifications measured at 5~35°C, humidity at 45~85%, under 86~106 kPa pressure, unless otherwise noted.

SOLDERABILITY

parameter	conditions/description	min	typ	max	units
hand soldering	for maximum 2 seconds	340	350	360	°C

MECHANICAL DRAWING

units: mm
tolerance: ±0.25 mm

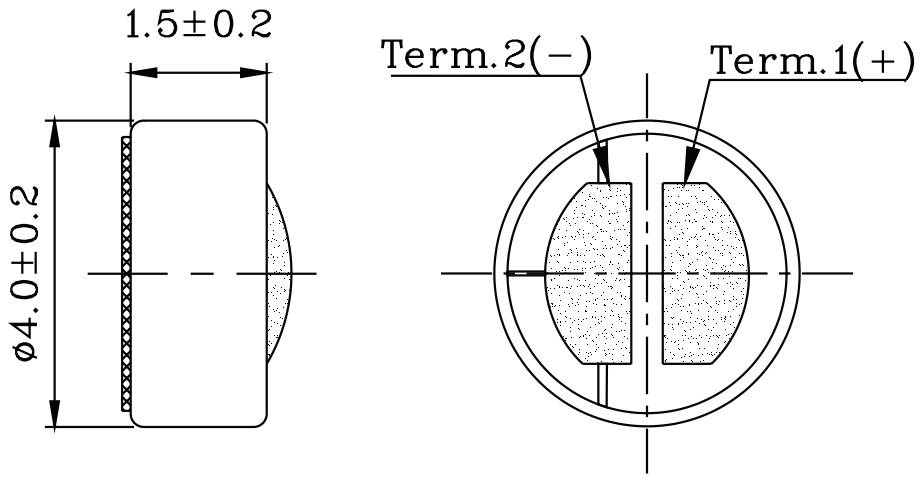

FREQUENCY RESPONSE CURVE

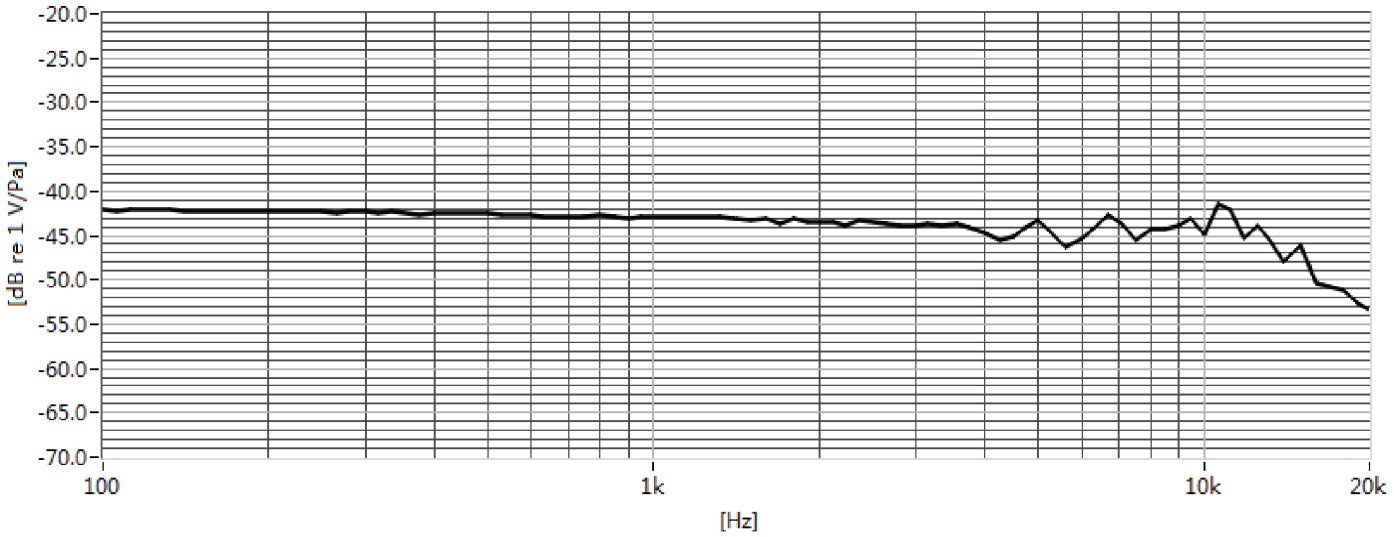

MEASUREMENT CIRCUIT

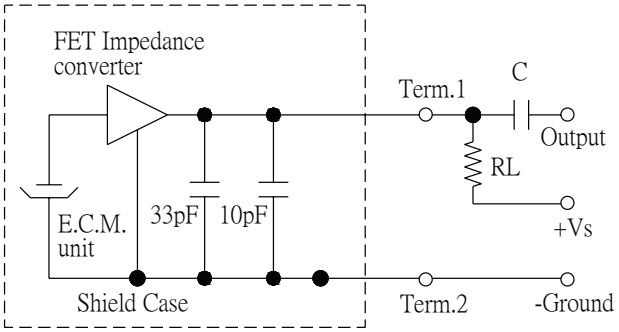

RL = 2.2 kΩ
C = 1 μF

PACKAGING

units: mm

Inner Box Size: 62 x 62 x 3 mm
Middle Box Size: 125 x 65 x 28 mm
Carton Size: 210 x 210 x 280 mm
Inner Box QTY: 100 pcs
Middle Box QTY: 1,000 pcs
Carton QTY: 10,000 pcs per carton

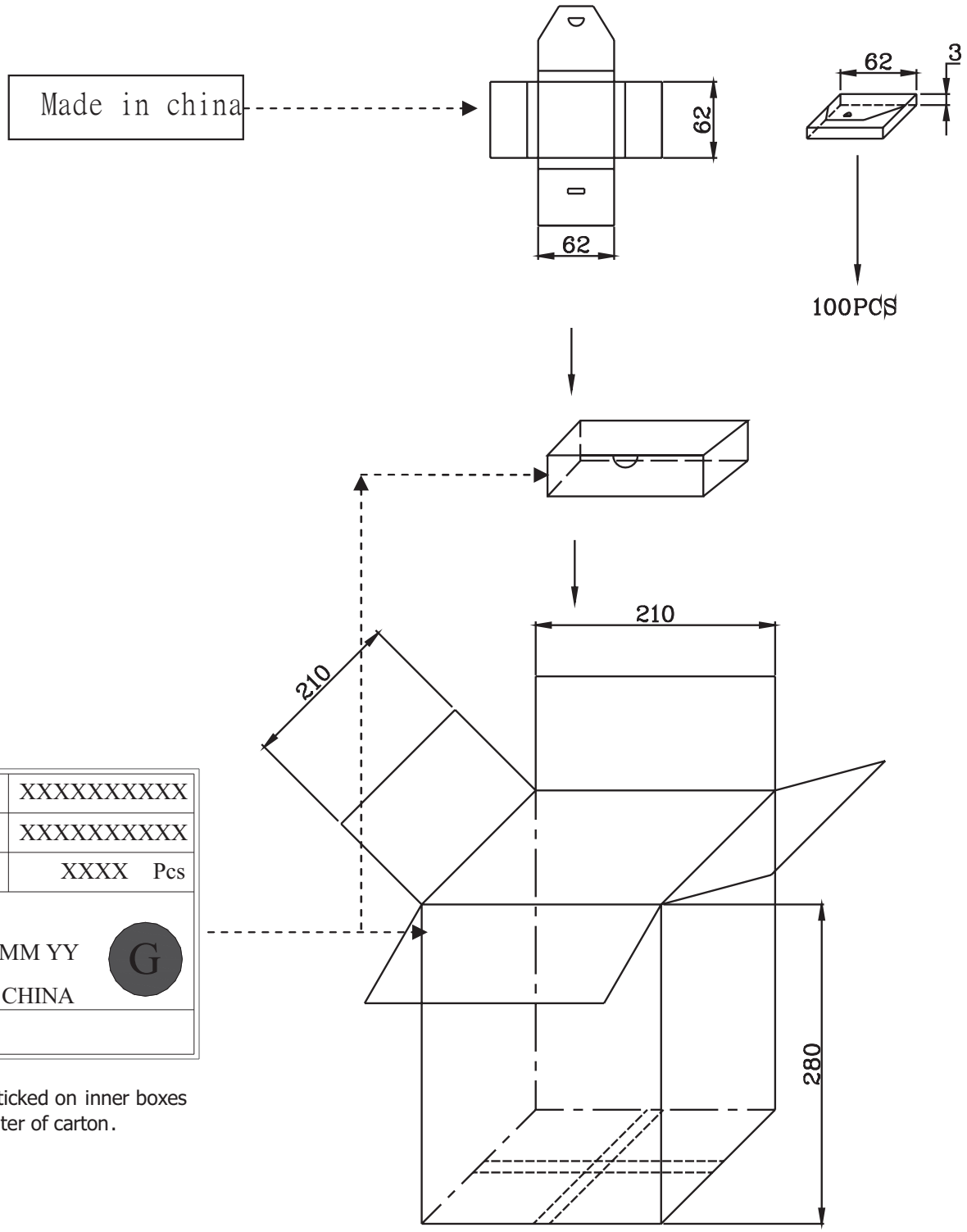

Lot No.	XXXXXXXXXX
Model No.	XXXXXXXXXX
Quantity.	XXXX Pcs
Date: DD MM YY G MADE IN CHINA	

* The label sticked on inner boxes and the outer of carton.

REVISION HISTORY

rev.	description	date
1.0	initial release	09/29/2017
1.01	added polarity details to drawing	01/23/2019
1.02	updated datasheet	03/14/2019
1.03	brand update	01/15/2020
1.04	logo, datasheet style update	08/05/2022

The revision history provided is for informational purposes only and is believed to be accurate.

CUI Devices offers a one (1) year limited warranty. Complete warranty information is listed on our website.

CUI Devices reserves the right to make changes to the product at any time without notice. Information provided by CUI Devices is believed to be accurate and reliable. However, no responsibility is assumed by CUI Devices for its use, nor for any infringements of patents or other rights of third parties which may result from its use.

CUI Devices products are not authorized or warranted for use as critical components in equipment that requires an extremely high level of reliability. A critical component is any component of a life support device or system whose failure to perform can be reasonably expected to cause the failure of the life support device or system, or to affect its safety or effectiveness.