SERIES: AMT31 | DESCRIPTION: MODULAR COMMUTATION ENCODER

FEATURES

- patented capacitive ASIC technology
- low power consumption
- U, V, W commutation phase channels
- 2, 4, 6, 8, 10, 12, 20 motor poles w/ incremental resolutions up to 4096 PPR
- resolutions and poles programmable with AMT Viewpoint™ PC software
- differential line driver versions
- digitally set zero position with AMT One Touch Zero™ module or serial commands
- compact modular package with locking hub for ease of installation
- radial and axial cable connections
- -40~125°C operating temperature

RoHS

ELECTRICAL

parameter	conditions/description	min	typ	max	units
power supply	VDD	4.5	5	5.5	V
start-up time[1]			200		ms
current consumption	with unloaded output		16		mA
single ended channels	output high level	VDD-0.1			V
	output low level			0.1	V
	output current (per channel)			15	mA
	rise/fall time		8		ns
differential RS-422 channels	output high level	3			V
	output low level			0.1	V
	output current (per channel)			20	mA
	rise/fall time	7	11	20	ns

Note: 1. Encoder must be stationary during start-up.

INCREMENTAL CHARACTERISTICS

parameter	conditions/description	min	typ	max	units
waveform	CMOS voltage square wave				
phase difference	A leads B for CCW rotation (viewed from front)		90		degrees
quadrature resolutions[2]	48, 96, 100, 125, 192, 200, 250, 256, 360, 384, 400, 500, 512, 768, 800, 1000, 1024, 1600, 2000, 2048, 2500, 4096				PPR
index[3]	one pulse per 360 degree rotation				
accuracy			0.2		degrees
quadrature duty cycle (at each resolution)	48, 96, 100, 125, 192, 256, 384	49	50	51	%
	200, 250, 360, 400, 768, 800	48	50	52	%
	500, 1000, 1600	46	50	54	%
	512, 1024 , 2048, 4096	50	50	50	%
	2000	44	50	56	%
	2500	43	50	57	%

Notes: 2. Resolutions programmed with AMT Viewpoint™ PC software. Default resolution set to 2048 PPR. Listed as pre-quadrature, meaning final number of counts is PPR x 4.
3. Zero position alignment set with AMT One Touch Zero™ module, AMT Viewpoint™ PC software, or serial commands.

COMMUTATION CHARACTERISTICS

parameter	conditions/description		min	typ	max	units
channels	CMOS Voltage (S) Quadrature Line Driver (Q) Commutation Line Driver (C) Line Driver (D)	A, B, Z, U, V, W A, $\bar{A}$, B, $\bar{B}$, Z, $\bar{Z}$, U, V, W A, B, Z, U, $\bar{U}$, V, $\bar{V}$, W, $\bar{W}$ A, $\bar{A}$, B, $\bar{B}$, Z, $\bar{Z}$, U, $\bar{U}$, V, $\bar{V}$, W, $\bar{W}$				
motor poles[4]	2, 4, 6, 8, 10, 12, 20					
waveform[4]	CMOS voltage square wave					
phase difference	WYE motor winding configurations			120		electrical degrees

Notes: 4. Pole counts and waveform direction set via AMT Viewpoint™ PC software. Default poles set to 4 poles and counter-clockwise direction.

MECHANICAL

parameter	conditions/description	min	typ	max	units
motor shaft length		9			mm
motor shaft tolerance			NOM +0/-0.015		mm
weight	weight varies by configuration		15.7		g
axial play				±0.3	mm
rotational speed (at each resolution)	48, 96, 100, 125, 192, 200, 250, 256, 384, 400, 500, 512, 800, 1000, 1024, 2048			8000	RPM
	360, 768, 1600, 2000, 4096			4000	RPM
	2500			2500	RPM

ENVIRONMENTAL

parameter	conditions/description	min	typ	max	units
operating temperature		-40		125	°C
humidity	non-condensing			85	%
vibration	10~500 Hz, 5 minute sweep, 2 hours on each XYZ			5	G
shock	3 pulses, 6 ms, 3 on each XYZ			200	G
RoHS	yes				

SERIAL INTERFACE

parameter	conditions/description	min	typ	max	units
protocol	serial UART				
controller	driven by onboard Microchip PIC18F25K80. See Microchip documentation for additional details.				
data rate	8 data bits, no parity, 1 stop bit, least significant bit first		115200		baud

WAVEFORMS

Figure 1

Quadrature signals with index showing counter-clockwise rotation

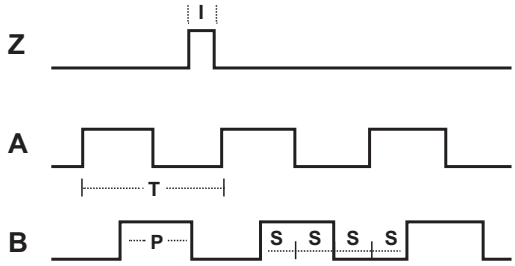

The following parameters are defined by the resolution selected for each encoder. The encoders resolution is listed as Pulses Per Revolution (PPR), which is the number of periods (or high pulses) over the encoders revolution.

Parameter	Description	Expression	Units	Notes
PPR	resolution		Pulses Per Revolution	This is the user selected value and the format all resolutions are listed in
CPR	counts	PPR x 4	Counts Per Revolution	This is the number of quadrature counts the encoder has
T	period	360/R	mechanical degrees	
P	pulse width	T/2	mechanical degrees	
S	A/B state width	T/4	mechanical degrees	This is the width of a quadrature state
I	index width	T/4	mechanical degrees	The width of a once per turn index is the state width for A & B lines

Note: For more information regarding PPR, CPR, or LPR (Lines Per Revolution) view https://www.cuidevices.com/blog/what-is-encoder-ppr-cpr-and-lpr

Figure 2

Commutation signals with index (The programmable direction setting dictates in which direction of rotation U will lead V, and V will lead W)

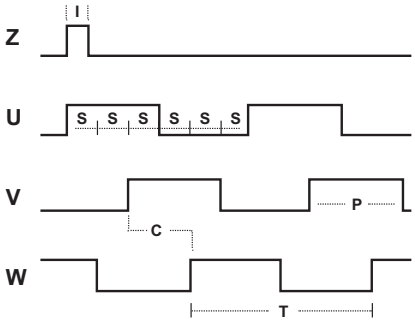

The following parameters are defined by the resolution and pole count selected for each encoder, where PPR = resolution and M = motor poles.

Parameter	Description	Expression	Units
T	period	360/M	mechanical degrees
P	pulse width	T/2	mechanical degrees
I	index width	360/(PPR*4)	mechanical degrees
S	U/V/W state width	60	electrical degrees
		T/6	mechanical degrees
C	phase spacing	120	electrical degrees
		T/3	mechanical degrees

PART NUMBER KEY

For customers that prefer a specific AMT31 configuration, please reference the custom configuration key below.

AMT31XX - XXXX - XXXX - XX - XX - X

Base Number

Orientation:
2 = Radial
3 = Axial

Output Signals:
S = CMOS Voltage
Q = Quadrature Line Driver
C* = Commutation Line Driver
D* = Line Driver

*Radial orientation only.

Quadrature Resolution (PPR):

0048	0500
0096	0512
0100	0768
0125	0800
0192	1000
0200	1024
0250	1600
0256	2000
0360	2048
0384	2500
0400	4096

Sleeve Bore Diameter:
2000 = 2 mm
3000 = 3 mm
3175 = 3.175 mm (1/8")
4000 = 4 mm
4760 = 4.76 mm (3/16")
5000 = 5 mm
6000 = 6 mm
6350 = 6.35 mm (1/4")
8000 = 8 mm

Motor Poles:

02	10
04	12
06	20
08	

Direction:
"blank" = CCW
CW = clockwise

Mounting Base:
S = Standard
W= Wide

AMT31-V KITS

In order to provide maximum flexibility for our customers, the AMT31 series is provided in kit form standard. This allows the user to implement the encoder into a range of applications using one sku#, reducing engineering and inventory costs.

ORDERING GUIDE

AMT31XX-V

Orientation:
2 = Radial
3 = Axial

Output Signals:
S = CMOS Voltage
Q = Quadrature Line Driver
C* = Commutation Line Driver
D* = Line Driver

*Radial orientation only.

SLEEVES								
2mm	3mm	1/8 inch (3.175mm)	4mm	3/16 inch (4.76mm)	5mm	6mm	1/4 inch (6.35mm)	8mm
Light Sky Blue	Orange	Purple	Gray	Yellow	Green	Red	Snow	Blue

BASE	WIDE BASE	TOP COVER	SHAFT ADAPTER	TOOL A	TOOL C
	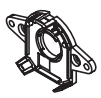				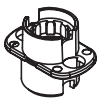

ENCODER INTERFACE

PINOUT CONNECTOR						
	Function					
#	AMT312S	AMT312Q	AMT312C	AMT312D	AMT313S	AMT313Q
1	TX_ENC+	TX_ENC+	TX_ENC+	TX_ENC+	RX_ENC+	RX_ENC+
2	RX_ENC+	RX_ENC+	RX_ENC+	RX_ENC+	TX_ENC+	TX_ENC+
3	U+	U+	U+	U+	U+	U+
4	GND[1]	GND[1]	GND[1]	GND[1]	GND[1]	GND[1]
5	W+	W+	W+	W+	W+	W+
6	+5 V	+5 V	+5 V	+5 V	+5 V	+5 V
7	V+	V+	V+	V+	V+	V+
8	B+	B+	B+	B+	B+	B+
9	N/A	B-	N/A	B-	N/A	B-
10	A+	A+	A+	A+	A+	A+
11	N/A	A-	N/A	A-	N/A	A-
12	Z+	Z+	Z+	Z+	Z+	Z+
13	N/A	Z-	N/A	Z-	N/A	Z-
14	MCLRB	MCLRB	MCLRB	MCLRB	MCLRB	MCLRB
15	N/A	N/A	W-	W-	N/A	N/A
16	N/A	N/A	V-	V-	N/A	N/A
17	N/A	N/A	U-	U-	N/A	N/A

Note: 1. Connect encoder GND to motor chassis as closely as possible. For additional grounding techniques contact CUI Application Support.

AMT312S, AMT312Q, AMT312C & AMT312D

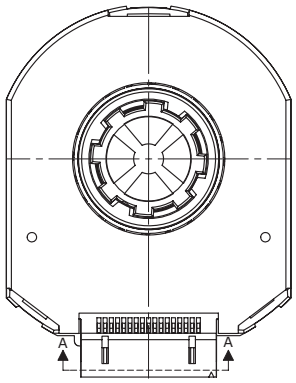

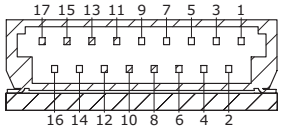

SECTION A-A
SCALE 4 : 1

Mating Connector:
JAE FI-W17S

AMT313S & AMT313Q

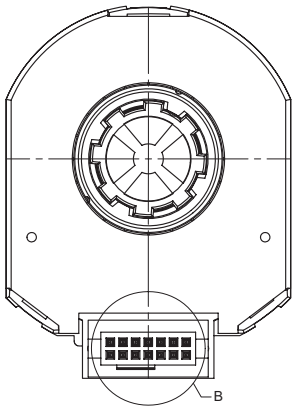

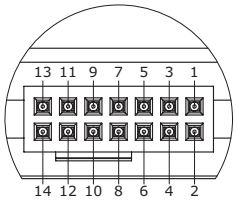

DETAIL B
SCALE 4 : 1

Mating Connector:
Samtec ISDF-07-D-L

MECHANICAL DRAWING

AMT312S, AMT312Q, AMT312C & AMT312D

units: mm
tolerance: ±0.1

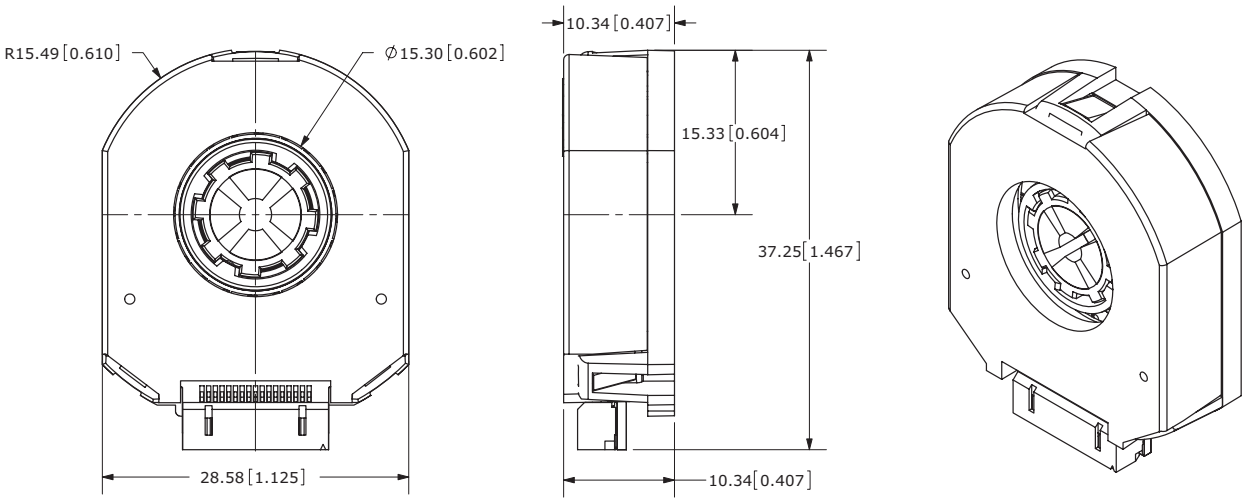

AMT313S & AMT313Q

units: mm
tolerance: ±0.1

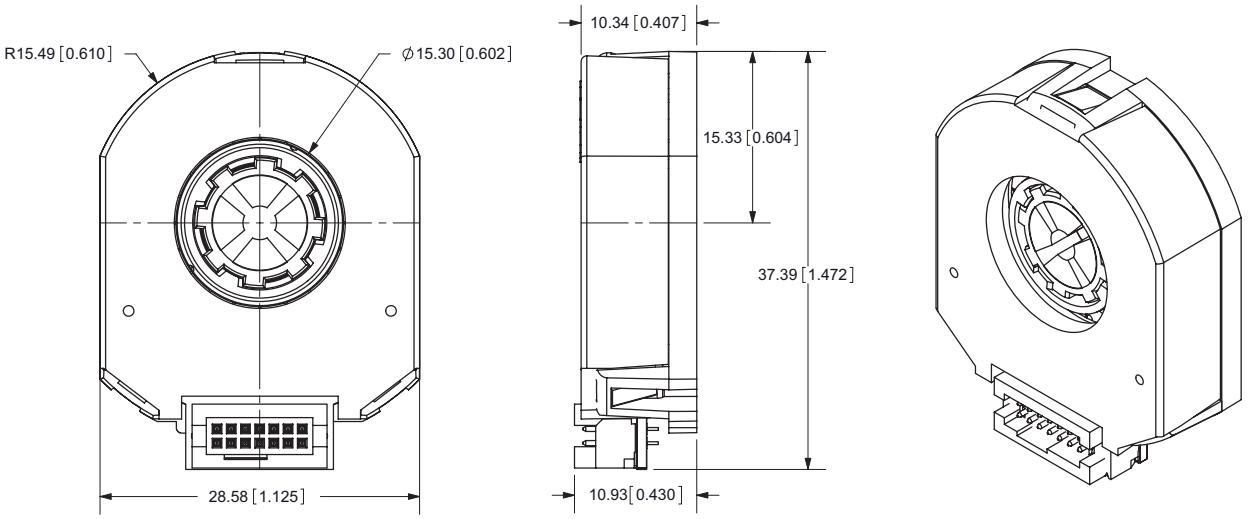

MECHANICAL DRAWING (CONTINUED)

MOUNTING HOLE PATTERNS

STANDARD BASE

units: mm[inch]
tolerance: ±0.1

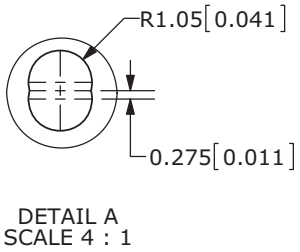

DETAIL A
SCALE 4 : 1

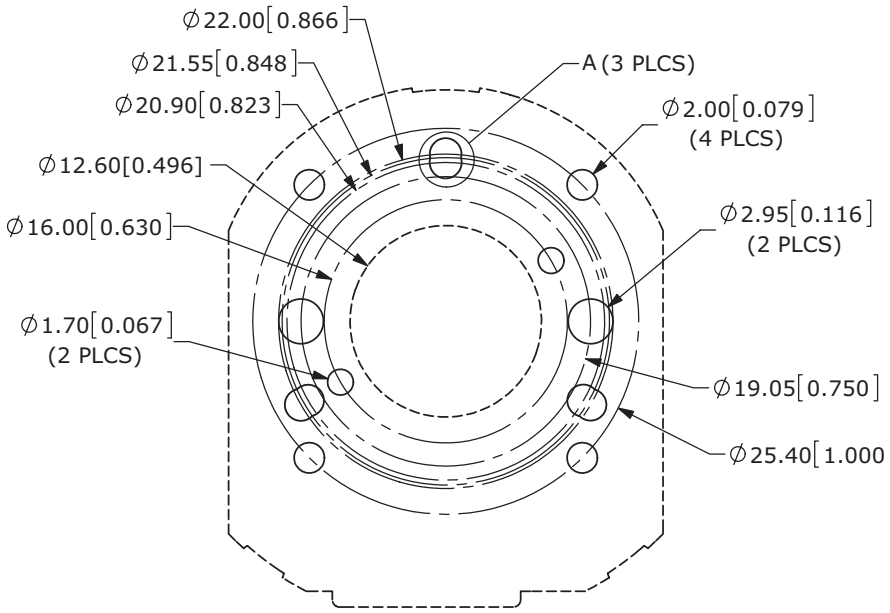

WIDE BASE

units: mm[inch]
tolerance: ±0.1

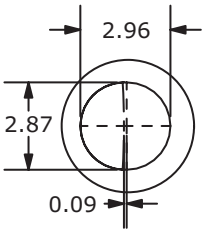

DETAIL A
SCALE 4 : 1

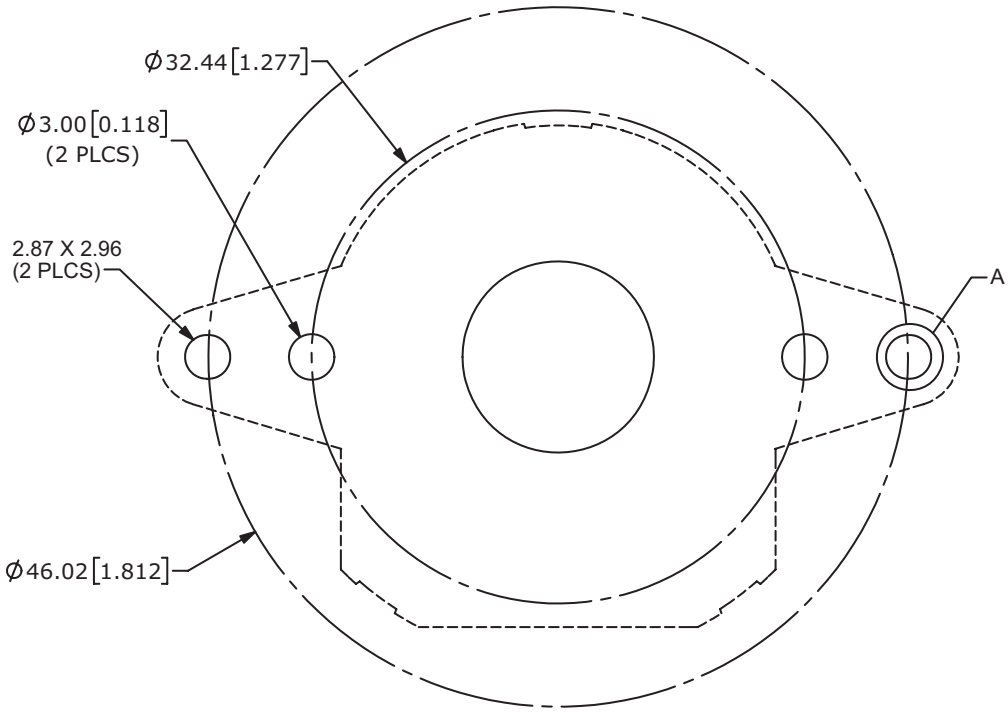

ASSEMBLY PROCEDURE

STEP 1

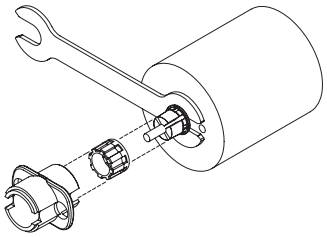

1. Insert Tool A as a spacer that defines the distance to the mounting surface.
2. Slide appropriate sized Sleeve over shaft all the way down to Tool A.
3. Slide Shaft Adaptor over Sleeve.
4. Use Tool C to press Shaft Adaptor over Sleeve (ensure Shaft Adapter and Tool C spline alignment) until flush with Tool A.

STEP 2

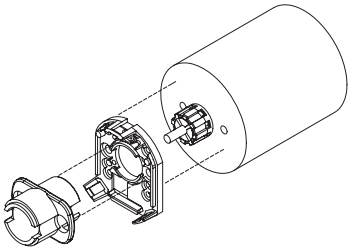

1. Remove Tools A and C.
2. Place Base on motor, with Tool C used as a centering tool.

STEP 3

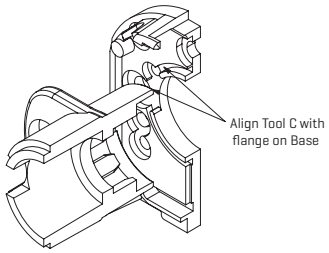

1. Align Tool C with flange on Base.
2. Slide Base and Tool C onto motor, centering onto the Shaft Adapter.

STEP 4

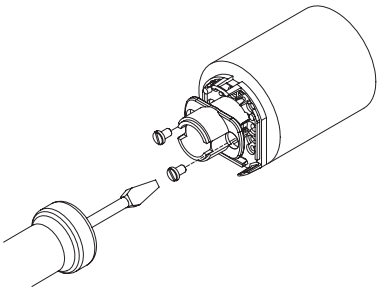

1. Fasten the Base on the motor (Tool C may need to be rotated to allow for some mounting configurations).
2. Remove Tool C.

STEP 5

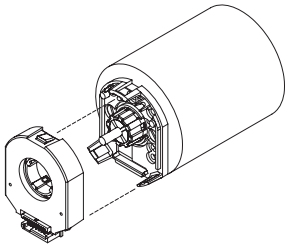

1. Snap the Top Cover onto the Base, carefully observing that the teeth of the Shaft Adaptor align with the grooves in the hub. *

* *We recommend no more than three cycles of mounting and removal of the AMT top cover base. Multiple cycles of mounting and removing the top cover can cause base fatigue over time and affect encoder performance.*

STEP 6

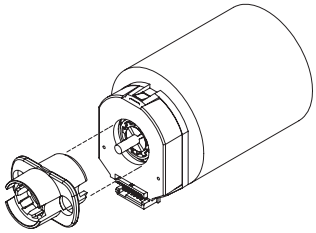

1. Make sure the snaps are fully engaged by pressing on the Hub with the reverse side of Tool C.
2. When assembly is finished, the Shaft Adaptor, Sleeve and Rotor Hub should all be flush with the Motor Shaft rotating freely.

APPLICATION NOTES

SERIAL INTERFACE

The AMT31 series encoder is designed to operate with a serial UART interface. This interface allows the encoder to be configured and programmed by the AMT Viewpoint™ application. Along with programming, the AMT Viewpoint™ application uses the serial interface for diagnostics and motor pole alignment. Below are instructions on how to use the serial interface for position zeroing.

Table 1

Serial Commands

Command	Action	Use
0	This command sends an ascii '0' (hex value 0x30).	This zeros the encoder and sets the index at the current angular position along with the rising edge of the commutation channel U. This position is stored in non-volatile memory and will remain present until a zero command is set again or the encoder is reprogrammed via the AMT Viewpoint™ application.
Q	This command sends an ascii 'Q' (hex value 0x51).	This command restarts the encoder as if it were power cycled.

Table 2

Serial Pins

Pin	Description	Connection
TX_ENC+	This is the pin that the encoder transmits serial data on.	Connect this pin to the receiver input of your serial/UART interface.
RX_ENC+	This is the pin that the encoder receives serial commands on.	Connect this pin to your serial/UART interface transmitter output.
MCLRB	This pin is used to force the encoder into reset for reprogramming via the AMT Viewpoint™ application.	Connection of this pin is not required for the above serial commands.

The serial interface operates at 115200 baud with 8 data bits, no parity, and 1 stop bit, and 1 start bit. This is the standard UART protocol. Data lines TX_ENC+ and RX_ENC+ are high when inactive.

Figure 3

Serial Timing Diagram

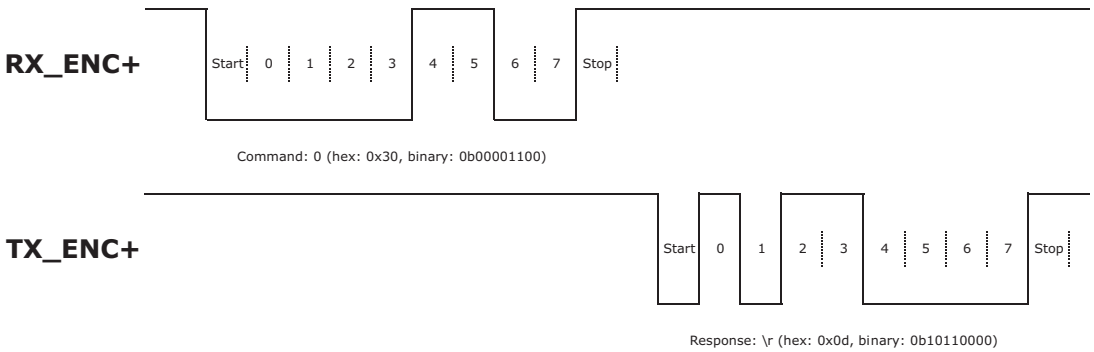

APPLICATION NOTES (CONTINUED)

COMMUTATION ALIGNMENT AND ZERO POSITION

The AMT31 series encoder requires minimal setup time for brushless DC (BLDC) motor applications. Installation can be completed with either a PC with the AMT Viewpoint™ application installed, an AMT-OTZ-1 zero alignment module, or any 5V serial interface. The following steps explain the proper commutation alignment procedure for the AMT31 encoder.

1. Ensure AMT31 encoder is set for correct pole count. To verify or change settings use the AMT Viewpoint™ software.
2. Mount encoder following AMT Assembly procedure.
3. Use the motor manufacturer's documentation to determine the correct motor phase to energize for alignment. Energized phase will coincide with the rising edge of the AMT31 encoders 'U' signal. This typically means energizing phase 1 by applying positive voltage to the wire labeled 'phase 1', and grounding the wire labeled 'phase 2'. The third wire always remains unconnected.
4. Using a power supply, energize the two wires found previously. This will lock the rotor into a fixed position.
5. Connect AMT31 encoder to an AMT-OTZ-1 zero alignment module, the AMT Viewpoint™ application, or any suitable 5V serial interface.
6. Use any of the connected devices to issue an alignment command to the encoder. This will digitally set the rising edge of 'U' and the 'Z' index to the current angular position.
7. Remove power from motor phase windings; connect motor and encoder to proper motor driver.
8. If the above is done correctly your AMT31 encoder is now ready for operation. As a verification of alignment you may power the encoder, and use an oscilloscope to monitor phase 1 of the motor and the 'U' channel of the encoder as you hand spin the motor. If alignment is correct, the square wave generated on the 'U' channel will overlap perfectly with the sine wave generated by phase 1 of the motor. If alignment does not match, recheck motor documentation and retry alignment procedure.

REVISION HISTORY

rev.	description	date
1.0	initial release	09/30/2014
1.01	updated datasheet	06/25/2015
1.02	updated datasheet	10/13/2015
1.03	added 360 & 2500 PPR resolutions, increased operating temperature to 125°C	12/18/2017
1.04	changed outer mounting holes to be oblong on wide base version	10/10/2018
1.05	brand update	11/21/2019
1.06	updated quadrature duty cycle details	10/08/2020
1.07	added motor shaft tolerance details, updated start-up details	09/10/2021
1.08	logo, datasheet style update	08/05/2022

The revision history provided is for informational purposes only and is believed to be accurate.

CUI Devices offers a one (1) year limited warranty. Complete warranty information is listed on our website.

CUI Devices reserves the right to make changes to the product at any time without notice. Information provided by CUI Devices is believed to be accurate and reliable. However, no responsibility is assumed by CUI Devices for its use, nor for any infringements of patents or other rights of third parties which may result from its use.

CUI Devices products are not authorized or warranted for use as critical components in equipment that requires an extremely high level of reliability. A critical component is any component of a life support device or system whose failure to perform can be reasonably expected to cause the failure of the life support device or system, or to affect its safety or effectiveness.

cuidevices.com