Additional Resources: Product Page

REV.	DESCRIPTION	DATE
A	NEW DRAWING	6/27/2019
B	brand update	4/13/2020

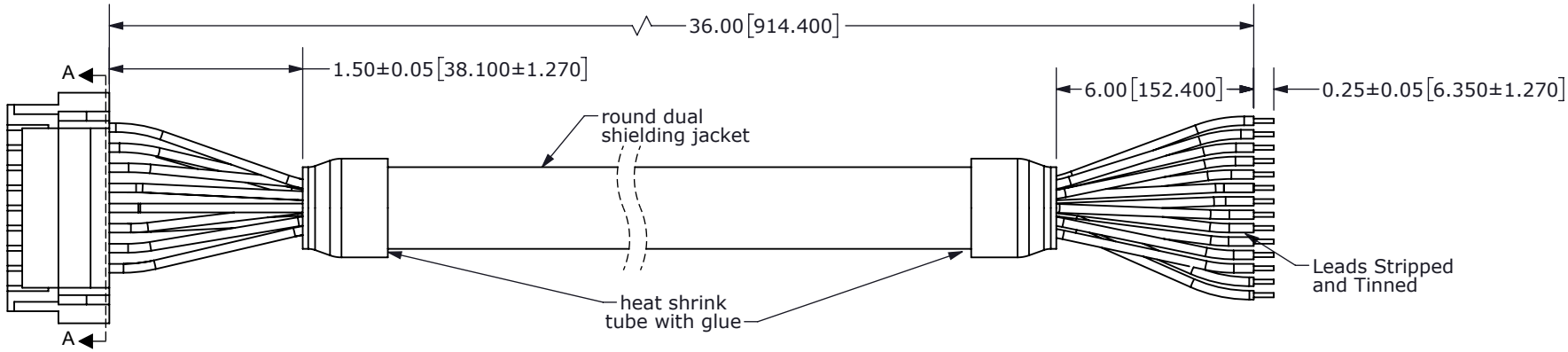

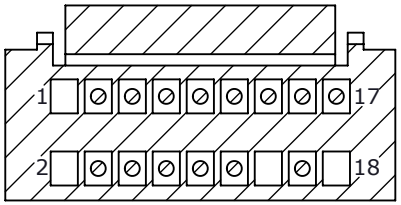

SECTION A-A
SCALE 3 : 1
(Back of Connector Housing)

Connector Pinout			
#	Function	Color	
		Primary	Stripe
1	RX_ENC+	Not Populated	
2	TX_ENC+	Not Populated	
3	U+	Brown	Red
4	GND	Green	Red
5	W+	Orange	Red
6	+5V	Red	Green
7	V+	Blue	Red
8	A+	Brown	White
9	A-	White	Brown
10	B+	Green	White
11	B-	White	Green
12	Z+	Blue	White
13	Z-	White	Blue
14	MCLR	Not Populated	
15	W-	Red	Orange
16	V-	Red	Blue
17	U-	Red	Brown
18	Case_GND	Not Populated	

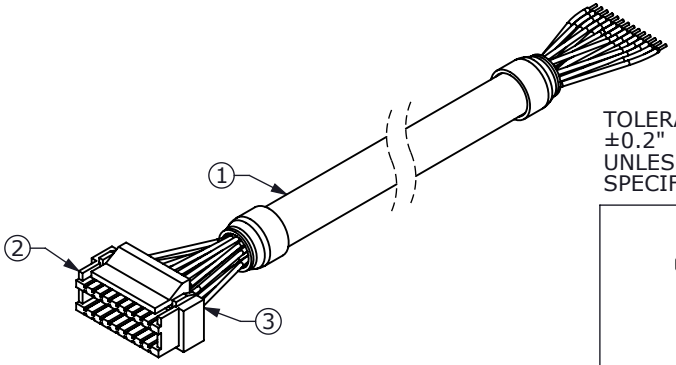

TOLERANCE:
±0.2"
UNLESS OTHERWISE
SPECIFIED

RoHS

	Part	QTY	Part#
1	Cable	1	Consolidated 5985-CL or EQV.
2	Connector	1	JST ZPDR-18V-S
3	Crimp Pins	14	JST SZPD-002T-P0.3

CUI DEVICES

6405 SW Rosewood St, Suite C
Lake Oswego, OR 97035
Phone: 877-323-3576

Website: www.cuidevices.com

ITEM NO: 977-7287R		REV: B	
PART NO. AMT-18C-3-036		UNITS: INCHES[MM]	
DRAWN BY: RDS	APPROVED BY:	SCALE: 2:1	

PC FILE NAME: AMT-18C-3-036

COPYRIGHT 2020 BY CUI DEVICES