SERIES: CDM1220 | DESCRIPTION: M12 CONNECTOR

FEATURES

- M12 male connector
- A code
- panel mount
- IP67

SPECIFICATIONS

parameter	conditions/description	min	typ	max	units
rated voltage	3 & 4 pole models 5 pole model 8 & 12 pole models			250 60 30	V V V
rated current	3, 4, & 5 pole models 8 pole model 12 pole model			4 2 1.5	A A A
withstanding voltage	for 1 minute		1,500		Vac
contact resistance				10	mΩ
insulation resistance	at 500 Vdc for 1 minute	100			MΩ
insertion/withdrawal force		0.3		3.0	kgf
operating temperature		-25		80	°C
life		100			cycles
safety approvals	compliant with IEC61076-2-101				
flammability rating	see material table				
RoHS	yes				
IP level	IP67 (in mated condition)				
packaging	box QTY: 25 pcs carton size: 275 x 235 x 335 mm carton QTY: 600 pcs				

SOLDERABILITY

parameter	conditions/description	min	typ	max	units
hand soldering	for maximum 3 seconds	360	380	400	°C

PART NUMBER KEY

CDM1220 - XX A - MW- F16 - 050 - 67

Base Number

No. of Poles (A-Coding):
03 = 3
04 = 4
05 = 5
08 = 8
12 = 12

MECHANICAL DRAWING

units: mm
tolerance:
0.5<X≤6.0: ±0.1 mm
6.0<X≤30.0: ±0.2 mm
unless otherwise noted

ITEM	DESCRIPTION	MATERIAL	PLATING/COLOR
A	M12x1.0 screw	brass	nickel
B	terminals; male	brass	gold
C	housing; male	PA66 (UL94V-0)	black
D	M16x1.5 nut	brass	nickel
E	resin	epoxy resin	black
F	o-ring	FKM	black
G	wire	UL 1061 L=508 mm	

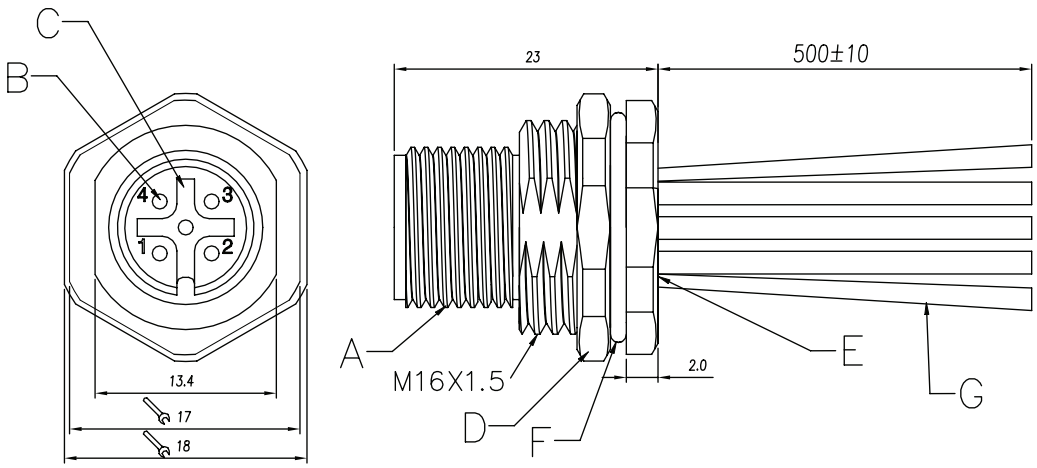

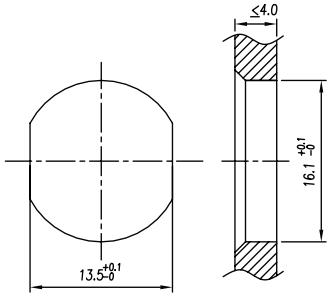

Recommended Panel Cutout

No. of Poles	3	4	5	8	12
A-Coding	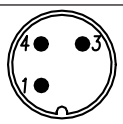	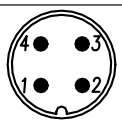	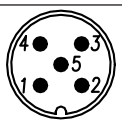		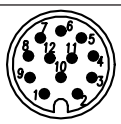
Wire Size	22 AWG	22 AWG	22 AWG	24 AWG	26 AWG
Pin #					
1	brown	brown	brown	white	brown
2	---	white	white	brown	blue
3	blue	blue	blue	green	white
4	black	black	black	yellow	green
5	---	---	gray	gray	pink
6	---	---	---	pink	yellow
7	---	---	---	blue	black
8	---	---	---	red	gray
9	---	---	---	---	red
10	---	---	---	---	violet
11	---	---	---	---	gray/pink
12	---	---	---	---	red/blue

REVISION HISTORY

rev.	description	date
1.0	initial release	12/14/2021
1.01	logo, datasheet style update	08/05/2022

The revision history provided is for informational purposes only and is believed to be accurate.

CUI Devices offers a one (1) year limited warranty. Complete warranty information is listed on our website.

CUI Devices reserves the right to make changes to the product at any time without notice. Information provided by CUI Devices is believed to be accurate and reliable. However, no responsibility is assumed by CUI Devices for its use, nor for any infringements of patents or other rights of third parties which may result from its use.

CUI Devices products are not authorized or warranted for use as critical components in equipment that requires an extremely high level of reliability. A critical component is any component of a life support device or system whose failure to perform can be reasonably expected to cause the failure of the life support device or system, or to affect its safety or effectiveness.