CUDEVICES

SERIES: AMT13 | **DESCRIPTION:** MODULAR INCREMENTAL ENCODER

FEATURES

- patented capacitive ASIC technology
- low power consumption
- incremental resolutions up to 4096 PPR
- resolutions programmable with AMT Viewpoint™ PC software
- differential line driver versions
- digitally set zero position
- compact modular package with locking hub for ease of installation
- radial and axial cable connections
- -40~125°C operating temperature

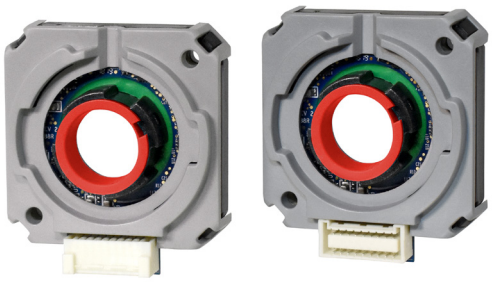

RoHS

ELECTRICAL

parameter	conditions/description	min	typ	max	units
power supply	VDD	4.5	5	5.5	V
start-up time[1]			200		ms
current consumption	with unloaded output		16		mA
single ended channels	output high level	VDD-0.1			V
	output low level			0.1	V
	output current (per channel)			15	mA
	rise/fall time		8		ns
differential channels	output high level	3			V
	output low level			0.1	V
	output current (per channel)			25	mA
	rise/fall time	7	11	20	ns

Note: 1. Encoder must be stationary during start-up.

INCREMENTAL CHARACTERISTICS

parameter	conditions/description	min	typ	max	units
channels	CMOS Voltage (S) A, B, Z Quadrature Line Driver (Q) A, Ā, B, B̄, Z, Z̄				
waveform	CMOS voltage square wave				
phase difference	A leads B for CCW rotation (viewed from front)				
quadrature resolutions[2]	48, 96, 100, 125, 192, 200, 250, 256, 360, 384, 400, 500, 512, 768, 800, 1000, 1024, 1600, 2000, 2048, 2500, 4096				PPR
index[3]	one pulse per 360 degree rotation				
accuracy			0.2		degrees
quadrature duty cycle (at each resolution)	48, 96, 100, 125, 192, 256, 384	49	50	51	%
	200, 250, 360, 400, 768, 800	48	50	52	%
	500, 1000, 1600	46	50	54	%
	512, 1024 , 2048, 4096	50	50	50	%
	2000	44	50	56	%
	2500	43	50	57	%

Notes: 2. Resolutions programmed with AMT Viewpoint™ PC software. Default resolution set to 2048 PPR. Listed as pre-quadrature, meaning final number of counts is PPR x 4.
3. Zero position alignment set with AMT One Touch Zero™ module, AMT Viewpoint™ PC software, or serial commands

MECHANICAL

parameter	conditions/description	min	typ	max	units
motor shaft length		13.5			mm
motor shaft tolerance			NOM +0/-0.015		mm
weight	weight varies by configuration		26		g
axial play				±0.3	mm
hub set screw to shaft torque			3		in-lb
rotational speed (at each resolution)	48, 96, 100, 125, 192, 200, 250, 256, 384, 400, 500, 512, 800, 1000, 1024, 2048			8000	RPM
	360, 768, 1600, 2000, 4096			4000	RPM
	2500			2500	RPM

ENVIRONMENTAL

parameter	conditions/description	min	typ	max	units
operating temperature		-40		125	°C
humidity	non-condensing			85	%
vibration	10~500 Hz, 5 minute sweep, 2 hours on each XYZ			5	G
shock	3 pulses, 6 ms, 3 on each XYZ			200	G
RoHS	yes				

SERIAL INTERFACE

parameter	conditions/description	min	typ	max	units
protocol	serial UART				
controller	Driven by onboard Microchip PIC18F25K80. See Microchip documentation for additional details.				
data rate	8 data bits, no parity, 1 stop bit, least significant bit first		115200		baud

WAVEFORMS

Figure 1

Quadrature signals with index showing counter-clockwise rotation

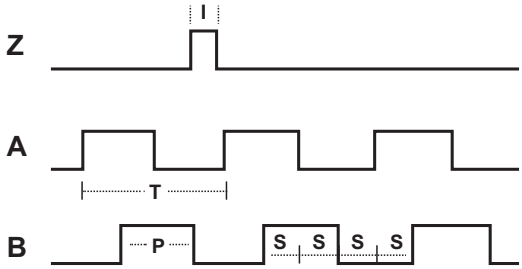

The following parameters are defined by the resolution selected for each encoder. The encoders resolution is listed as Pulses Per Revolution (PPR), which is the number of periods (or high pulses) over the encoders revolution.

Parameter	Description	Expression	Units	Notes
PPR	resolution		Pulses Per Revolution	This is the user selected value and the format all resolutions are listed in
CPR	counts	PPR x 4	Counts Per Revolution	This is the number of quadrature counts the encoder has
T	period	360/R	mechanical degrees	
P	pulse width	T/2	mechanical degrees	
S	A/B state width	T/4	mechanical degrees	This is the width of a quadrature state
I	index width	T/4	mechanical degrees	The width of a once per turn index is the state width for A & B lines

Note: For more information regarding PPR, CPR, or LPR (Lines Per Revolution) view https://www.cuidevices.com/blog/what-is-encoder-ppr-cpr-and-lpr

PART NUMBER KEY

For customers that prefer a specific AMT13 configuration, please reference the custom configuration key below.

AMT13XX - XXXX - XXXX

Base Number

Orientation:
2 = Radial
3 = Axial

Output Signals:
S = CMOS Voltage
Q = Quadrature Line Driver

Quadrature Resolution (PPR):

0048	0500
0096	0512
0100	0768
0125	0800
0192	1000
0200	1024
0250	1600
0256	2000
0360	2048
0384	2500
0400	4096

Bore Diameter:
9000 = 9 mm
9525 = 3/8"
1000 = 10 mm
1100 = 11 mm
1200 = 12 mm
1270 = 1/2"
1300 = 13 mm
1400 = 14 mm
1500* = 15 mm
1587 = 5/8"

*15 mm bore diameter option only available as custom configuration.

AMT13-V KITS

In order to provide maximum flexibility for our customers, the AMT13 series is provided in kit form standard. This allows the user to implement the encoder into a range of applications using one sku#, reducing engineering and inventory costs. AMT13 kit includes all items shown below.

ORDERING GUIDE

AMT13XX-V

Orientation:
2 = Radial
3 = Axial

Output Signals:
S = CMOS Voltage
Q = Quadrature Line Driver

SHAFT ADAPTERS							
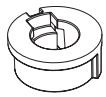	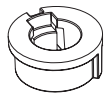	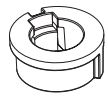	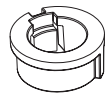	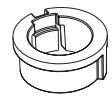	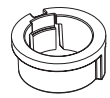	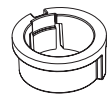	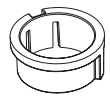
9 mm	3/8 in	10 mm	11 mm	12 mm	1/2 in	13 mm	14 mm
Light Blue	Orange	Purple	Gray	Yellow	Green	Red	Blue

AMT13	ALIGNMENT TOOL*	PLACEMENT TOOL	ALLEN WRENCH
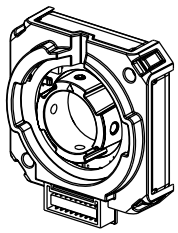 Shaft adapter is not needed for 5/8" shaft	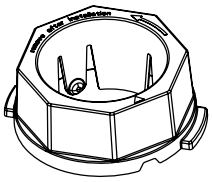	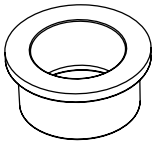	

*Alignment Tool comes pre-installed on all AMT13 Series.

ENCODER INTERFACE

CONNECTOR PINOUT				
Function				
#	**AMT132S**	**AMT133S**	**AMT132Q**	**AMT133Q**
1	RX_ENC+	RX_ENC+	RX_ENC+	RX_ENC+
2	TX_ENC+	TX_ENC+	TX_ENC+	TX_ENC+
3	NA	N/A	N/A	N/A
4	GND	GND	GND	GND
5	N/A	N/A	N/A	N/A
6	+5 V	+5 V	+5 V	+5 V
7	N/A	N/A	N/A	N/A
8	A+	A+	A+	A+
9	N/A	N/A	A-	A-
10	B+	B+	B+	B+
11	N/A	N/A	B-	B-
12	Z+	Z+	Z+	Z+
13	N/A	N/A	Z-	Z-
14	MCLR	MCLR	MCLR	MCLR
15	N/A	N/A	N/A	N/A
16	N/A	N/A	N/A	N/A
17	N/A	N/A	N/A	N/A
18*	NOISE GND	NOISE GND	NOISE GND	NOISE GND

*Pin 18 is not connected internally for standard encoders. Contact CUI Devices for support with high noise applications.

AMT132

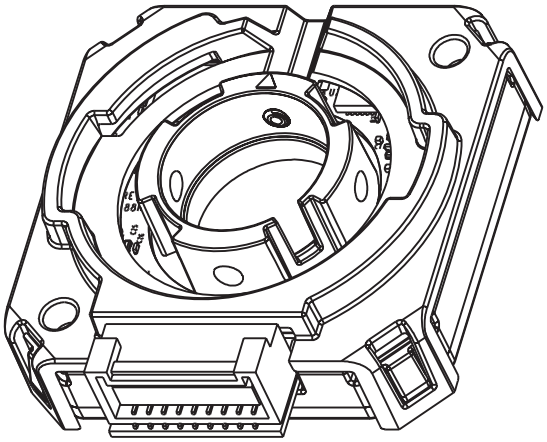

AMT133

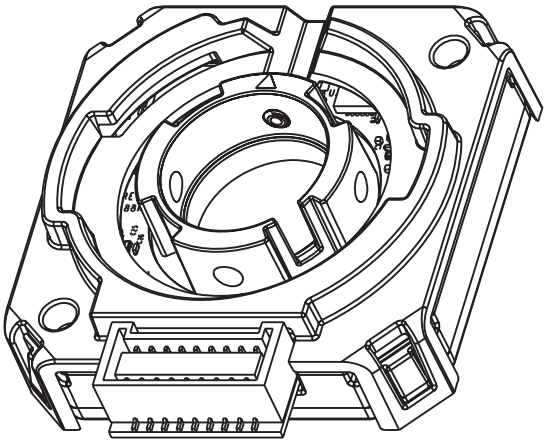

Mating Connector:
JST ZPDR-18V-S

MECHANICAL DRAWING

units: mm
tolerance:
X.XX ±0.01 mm
hole dia: ±0.003 mm

AMT132

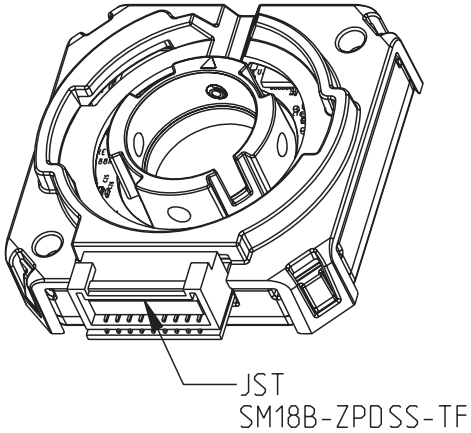

AMT133

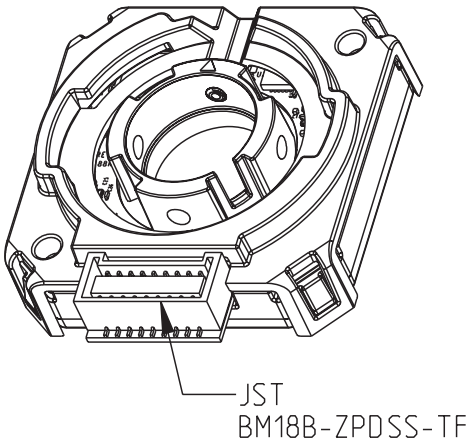

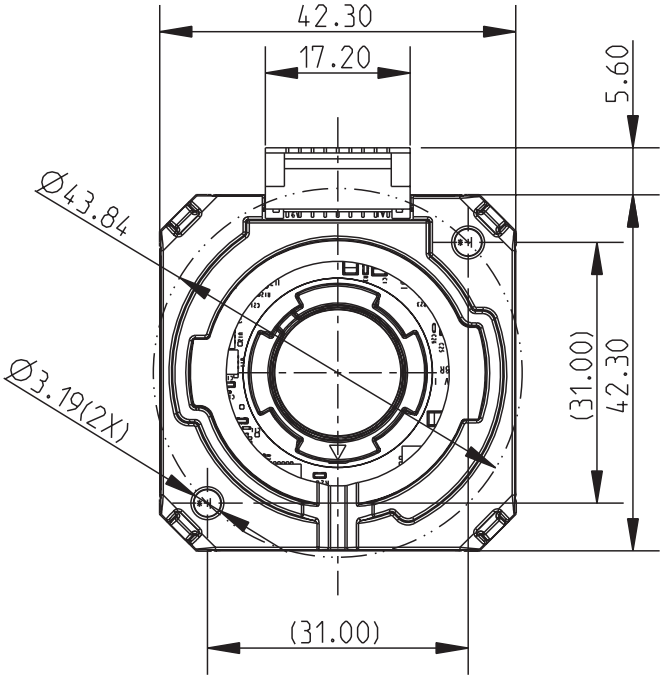

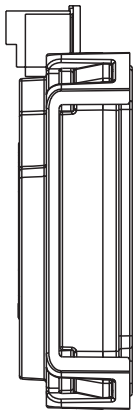

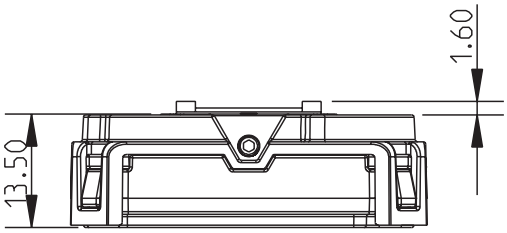

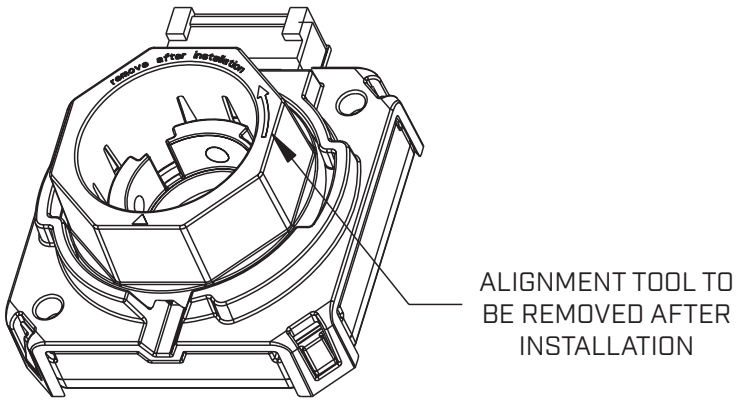

ASSEMBLY PROCEDURE

STEP 1

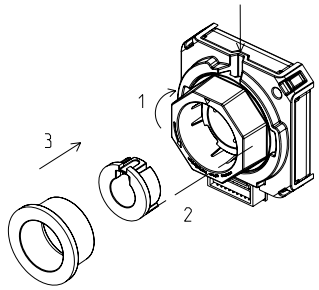

1. Begin by rotating the pre-installed alignment tool clockwise and completely to the right so that the pre-installed shaft set screw is visible.
2. Select the appropriately sized shaft adapter and insert it into the encoder making sure the adapter is properly aligned with the keyway in the metal hub. No adapter is needed for a 5/8" motor shaft.
3. Select the placement tool and insert it into the encoder. This placement tool holds the encoder's hub and shaft adapter in the proper position for installation onto the motor shaft.

STEP 2

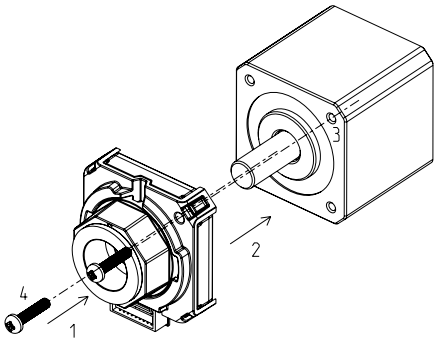

1. Slide the encoder onto the motor shaft applying force only to the placement tool to maintain proper alignment of the encoder's hub and shaft adapter.
2. Press until the encoder sits flush with the motor body.
3. Once in contact with the motor body, rotate the encoder until the mounting holes are aligned with the proper bolt circle.
4. Insert screws and fasten the encoder to the motor.

STEP 3

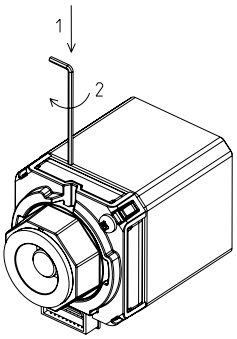

1. Insert the Allen Wrench into the notch on the top.
2. Tighten the shaft set screw to the recommended torque settings per the spec.

STEP 4

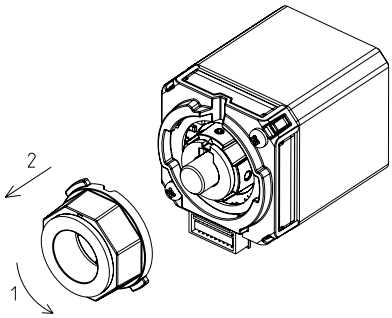

1. Rotate the placement tool and alignment tool counterclockwise until the tabs align with the openings.
2. Remove both tools from the encoder.
3. When installation is finished, the motor shaft should be rotating freely.

APPLICATION NOTES

SERIAL INTERFACE

The AMT13 series encoder is designed to operate with a serial UART interface. This interface allows the encoder to be configured and programmed by the AMT Viewpoint™ application. Along with programming, the AMT Viewpoint™ application uses the serial interface for diagnostics and index alignment. Below are instructions on how to use the serial interface for position zeroing.

Table 1

Serial Commands

Command	Action	Use
0	This command sends an ascii '0' (hex value 0x30).	This zeros the encoder and sets the index at the current angular position. This position is stored in non-volatile memory and will remain present until a zero command is set again or encoder is reprogrammed via AMT Viewpoint™.
Q	This command sends an ascii 'Q' (hex value 0x51).	This command restarts the encoder as if it were power cycled.

Table 2

Serial Pins

Pin	Description	Connection
TX_ENC+	This is the pin that the encoder transmits serial data on.	Connect this pin to the receiver input of your serial/UART interface.
RX_ENC+	This is the pin that the encoder receives serial commands on.	Connect this pin to your serial/UART interface transmitter output.
MCLRB	This pin is used to force the encoder into reset for reprogramming via the AMT Viewpoint™ application.	Connection of this pin is not required for the above serial commands.

The serial interface operates at 115200 baud with 8 data bits, no parity, and 1 stop bit, and 1 start bit. This is the standard UART protocol. Data lines TX_ENC+ and RX_ENC+ are high when inactive.

Figure 2

Serial Timing Diagram

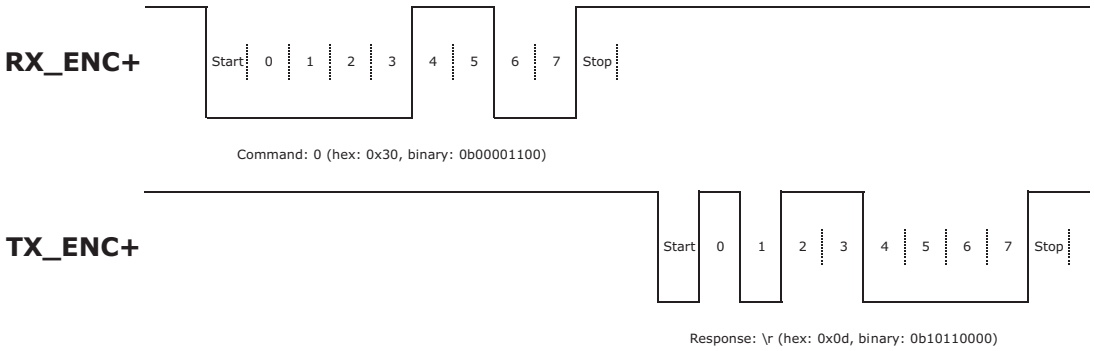

REVISION HISTORY

rev.	description	date
1.0	initial release	06/21/2019
1.01	brand update	10/04/2019
1.02	updated quadrature duty cycle details	10/08/2020
1.03	added motor shaft tolerance details, updated start-up details	09/10/2021
1.04	logo, datasheet style update	08/05/2022

The revision history provided is for informational purposes only and is believed to be accurate.

CUI Devices offers a one (1) year limited warranty. Complete warranty information is listed on our website.

CUI Devices reserves the right to make changes to the product at any time without notice. Information provided by CUI Devices is believed to be accurate and reliable. However, no responsibility is assumed by CUI Devices for its use, nor for any infringements of patents or other rights of third parties which may result from its use.

CUI Devices products are not authorized or warranted for use as critical components in equipment that requires an extremely high level of reliability. A critical component is any component of a life support device or system whose failure to perform can be reasonably expected to cause the failure of the life support device or system, or to affect its safety or effectiveness.